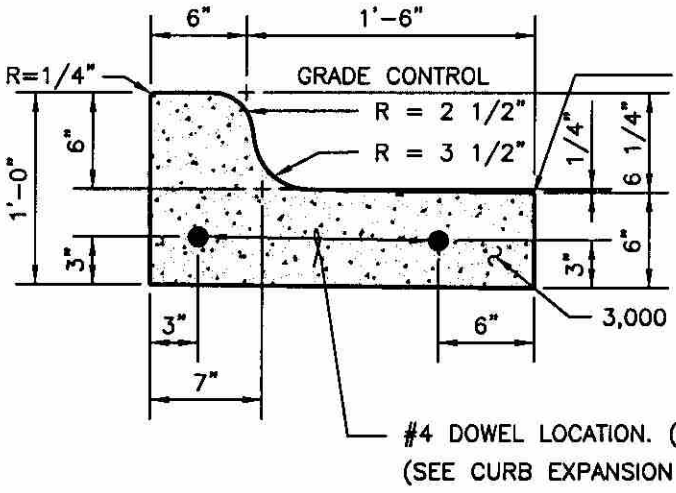

SPILL CURB

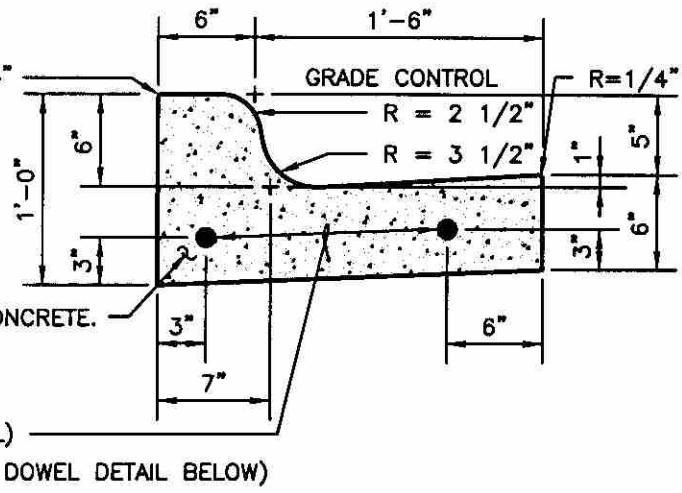

CATCH CURB

#4 DOWEL LOCATION. (TYPICAL)
(SEE CURB EXPANSION JOINT DOWEL DETAIL BELOW)

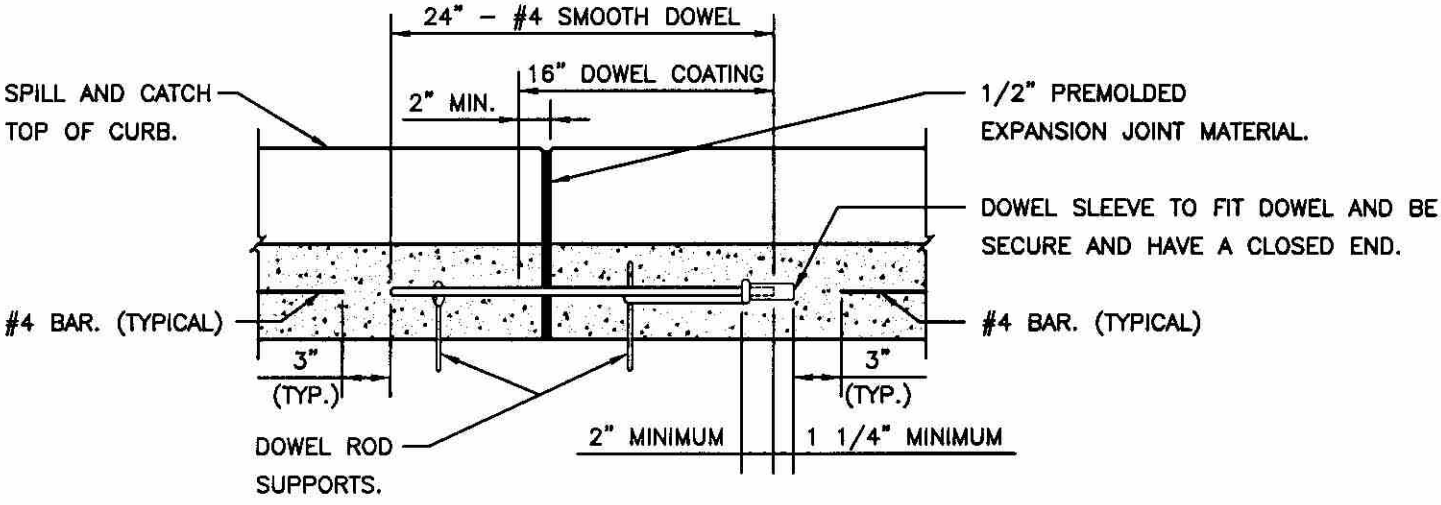

CURB EXPANSION JOINT DOWEL DETAIL

NOTES:

1. ALL WORK AND MATERIAL SHALL CONFORM TO ASTM A615, A615M, C309 AND D1752. BROOM FINISH EXPOSED SURFACE.
2. CONTROL JOINT SPACING SHALL NOT EXCEED 10'-0'.
3. EXPANSION JOINTS AS PER STANDARD ASTM D-1752.
4. EXPANSION JOINT INTERVALS NOT TO EXCEED 40'-0" FOR ALL CURBS AND CONSTRUCTION METHODS.
5. ALL CURBS SHALL HAVE A MINIMUM OF 4" OF COMPACTED FLEXIBLE BASE BETWEEN BOTTOM OF CURB AND TOP SUBGRADE THAT SHALL EXTEND A MINIMUM OF 18" BEHIND BACK OF CURB. TOTAL DEPTH OF FLEXIBLE BASE UNDER AND BEHIND CURB SHALL BE: (TOTAL DEPTH OF FLEXIBLE BASE) LESS (6-INCHES).
6. ALL CURBS SHALL CONFORM TO THESE DETAILS INDEPENDANT OF THE CONSTRUCTION METHODS USED.

RECORD SIGNED COPY ON FILE AT PUBLIC WORKS APPROVED 08-21-03 DATE THE ARCHITECT/ENGINEER ASSUMES RESPONSIBILITY FOR THE APPROPRIATE USE OF THIS DETAIL.	CITY OF ROUND ROCK SPILL AND CATCH CURB DETAIL (WITH CURB EXPANSION JOINT DOWEL DETAIL)	DRAWING NO: S-05