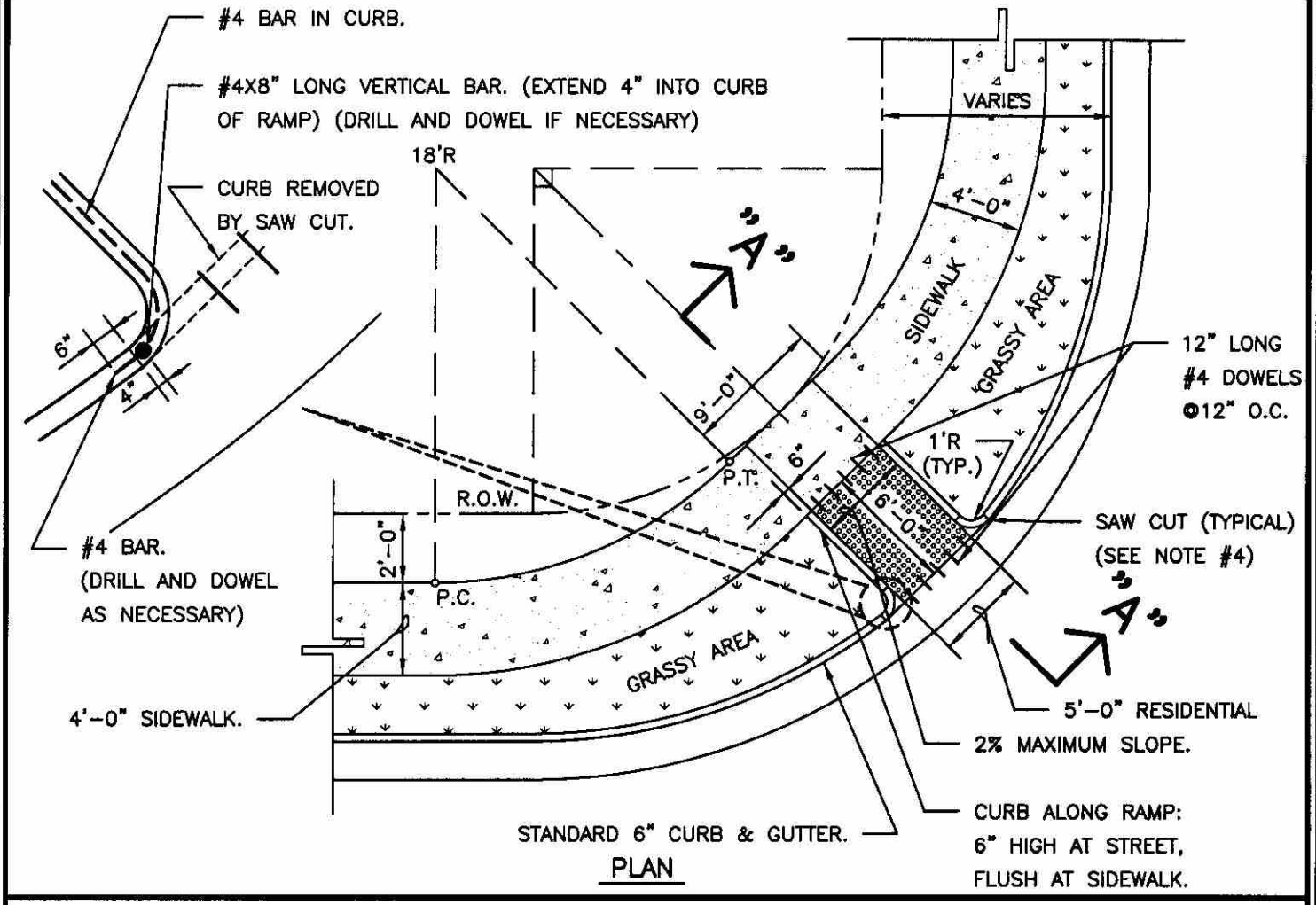

PLAN

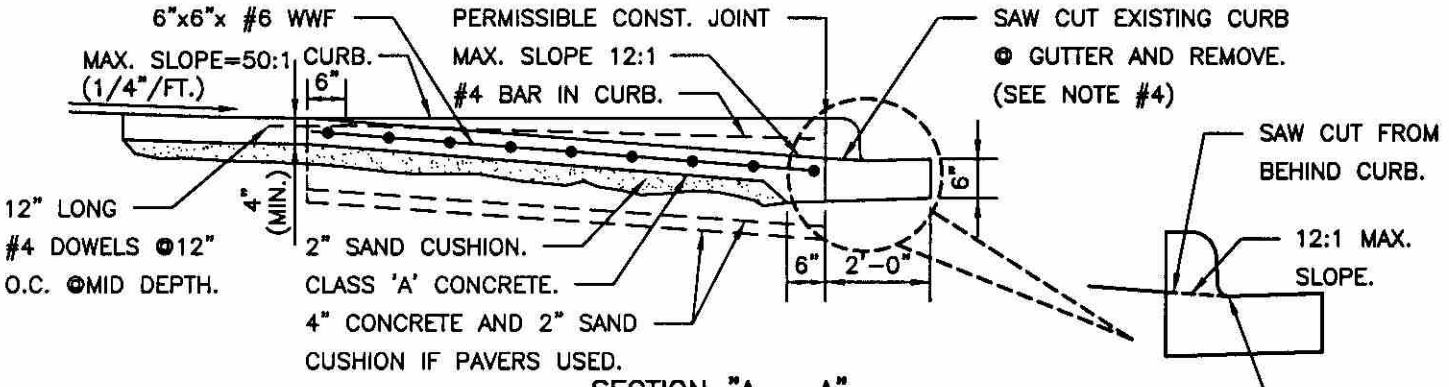

SECTION "A – A"

NOTES:

1. SIDEWALKS SHALL BE A MINIMUM OF 4'-0" WIDE.
2. THE RAMP SHALL HAVE A DETECTABLE WARNING AND CONTRASTING COLORED SURFACE. THE RAMP SHALL BE STAMPED AND DYED CONCRETE OR APPROVED EQUAL.
3. THE POSITION OF THE RAMP MAY BE ALTERED IN THE FIELD BY THE ENGINEER, BUT ONLY WITH THE PUBLIC WORKS DEPARTMENT APPROVAL.
4. SAW CUTTING IS APPLICABLE FOR INSTALLATION WHERE THE CURB LAYDOWN FOR THE RAMP IS NOT PROVIDED.
5. THE SIDEWALK PEDESTRIAN RAMP SHALL MEET ALL APPLICABLE A.D.A. REQUIREMENTS.

RECORD SIGNED COPY ON FILE AT PUBLIC WORKS APPROVED 08-21-03 DATE	CITY OF ROUND ROCK	DRAWING NO: S-07
THE ARCHITECT/ENGINEER ASSUMES RESPONSIBILITY FOR THE APPROPRIATE USE OF THIS DETAIL.	SIDEWALK PEDESTRIAN RAMP DETAIL (TYPE 1)	CITY OF ROUND ROCK TEXAS