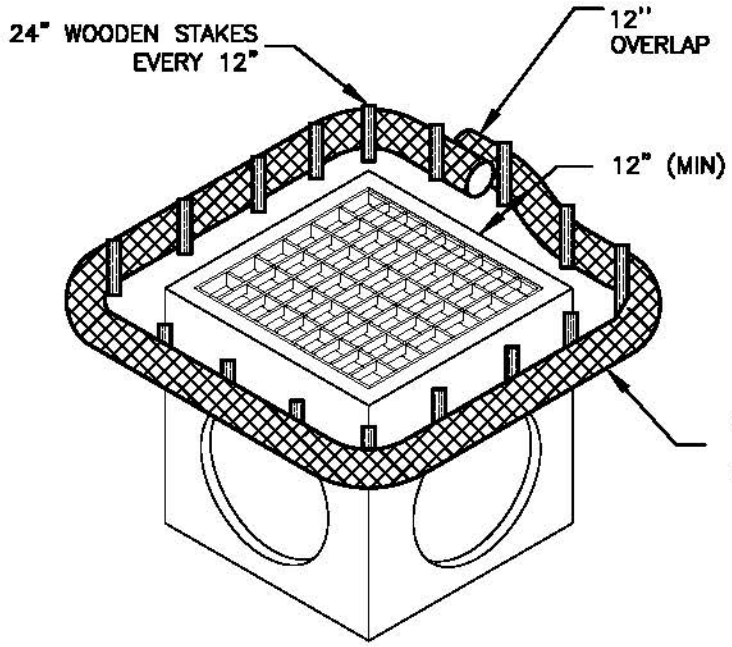

ISOMETRIC

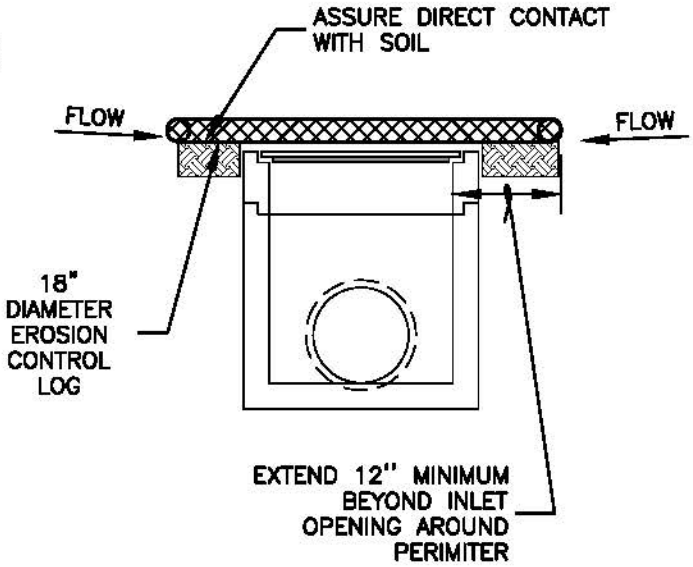

CROSS SECTION

NOTES:

1. EROSION CONTROL LOG CONTAINMENT MESH SHALL BE 100% BIODEGRADABLE, PHOTODEGRADABLE OR RECYCLABLE; AND FILL MATERIAL SHALL CONSIST OF MULCH, ASPEN EXCELSIOR FIBERS, CHIPPED SITE VEGETATION, COCONUT FIBERS, 100% RECYCLABLE FIBERS, OR ANY OTHER ACCEPTABLE MATERIAL EXCLUDING STRAW AND HAY.
2. DAILY INSPECTION SHALL BE MADE BY THE CONTRACTOR AND SILT ACCUMULATION MUST BE REMOVED WHEN DEPTH REACHES 6".
3. CONTRACTOR SHALL MONITOR THE PERFORMANCE OF INLET PROTECTION DURING EACH RAINFALL EVENT AND IMMEDIATELY CLEAN THE INLET PROTECTION IF EXCESSIVE PONDING OCCURS.
4. INLET PROTECTIONS SHALL BE REMOVED AS SOON AS THE SOURCE OF SEDIMENT IS STABILIZED.

RECORD SIGNED COPY ON FILE AT PUBLIC WORKS APPROVED 03-25-11 DATE THE ARCHITECT/ENGINEER ASSUMES RESPONSIBILITY FOR THE APPROPRIATE USE OF THIS DETAIL. (NOT TO SCALE)	CITY OF ROUND ROCK AREA INLET PROTECTION WITH EROSION CONTROL LOG DETAIL	DRAWING NO: EC-16 ROUND ROCK, TEXAS PURPOSE. PASSION. PROSPERITY