CITY OF ROUND ROCK
UTILITIES AND ENVIRONMENTAL SERVICES DEPARTMENT

Project Manual For:

Greenlawn Storm Drainage Improvements

August 2016

Prepared By:

City of Round Rock

Greenlawn Storm Drainage Improvements

TABLE OF CONTENTS

Section	Description	No. of Pages
00020	Notice to Bidders	1
00100	Instructions to Bidders	4
00200	Bid Bond	2
00300	Bid Form	10
00410	Statement of Bidder's Safety Experience	1
00500	Agreement	5
	Attachment A	1
00600	Insurance & Construction Bond Forms	
	Performance & Payment Bond Instructions	1
	Insurance Instructions	1
00610	Performance Bond	2
00620	Payment Bond	2
00650	Certificate of Liability Insurance	1
00700	General Conditions	41
00800	Supplemental General Conditions	2
00900	Special Conditions	5
01000	Technical Specifications	4
	Attachment A	10
02000	Plans, Details and Notes	23

00020 NOTICE TO BIDDERS

NOTICE TO BIDDERS

Sealed bids addressed to Danny Halden P.E., City Engineer, City of Round Rock, Utilities and Environmental Services Dept., 2008 Enterprise Drive, Round Rock, TX 78664, for furnishing all labor, material and equipment and performing all work required for the project titled, Greenlawn Storm Drainage Improvements (project includes approximately 300 linear feet of stormdrain, 550 linear feet of concrete-lined channel, 150 linear feet of grass-lined channel, an outfall and associated junction boxes and appurtenances. In addition, the project also includes an add alternate for pavement milling/overlay on Greenlawn Boulevard from Parkside Circle to Gattis School Road), will be received until August 30, 2016 at 2 p.m., then publicly opened and read aloud at the same address. Bid envelopes shall state date and time of bid and "Greenlawn Storm Drainage Improvements". Bids must also be accompanied by a "Statement of Bidder's Safety Experience" included in Section 410 of the Project Manual. No bids may be withdrawn after the scheduled opening time. Any bids received after scheduled bid opening time will be returned unopened.

Bids must be submitted on City of Round Rock bid forms and must be accompanied by an acceptable bid security as outlined in the Instructions to Bidders, payable to the City of Round Rock, Texas equal to five percent (5%) of the total bid amount. Plans, Bid Forms, Specifications, and Instructions to Bidders may be obtained from the City of Round Rock website at the following web address: www.roundrocktexas.gov/utilitiescip. **Bidders shall be responsible for printing or obtaining prints of the aforementioned documents as necessary.** For questions please contact the City's Project Manager, Danny Halden P.E., City Engineer , (512) 218-6610.

In case of ambiguity, duplication, or obscurity in the bids, the City of Round Rock reserves the right to construe the meaning thereof. The City of Round Rock further reserves the right to reject any or all bids and to waive any informalities and irregularities in the bids received.

The successful bidder will be expected to execute the City of Round Rock's standard contract and to furnish performance and payment bonds, all as described in the bid documents. Contractors and subcontractors shall pay to laborers, workmen, and mechanics the prevailing wage rates as determined by the City of Round Rock.

A non-mandatory pre-bid conference is scheduled for August 24, 2016 at 11:00 a.m. at 2008 Enterprise Drive, Round Rock, Texas.

Publish Dates:

Austin American-Statesman:
August 15, 2016
August 22, 2016

00100 INSTRUCTIONS TO BIDDERS

INSTRUCTIONS TO BIDDERS

1. Prior to submitting any bid, bidders are required to read all drawings (plans), specifications, and all other Project Manual and/or Contract Documents carefully; to inform themselves by their independent research, test and investigation of the difficulties to be encountered and judge for themselves of the accessibility of the Work and all attending circumstances affecting the cost of doing the Work and the time required for its completion and obtain all information required to make a bid. **The aforementioned documents may only be obtained from the City's website at the following web address:** www.roundrocktexas.gov/utilitiescip **. Bidders shall be responsible for printing or obtaining prints of the aforementioned documents as necessary.**

2. Should the bidder find discrepancies in, or omissions from the drawings (plans), specifications, or other Project Manual and/or Contract Documents, or should he be in doubt as to their meaning, he should notify at once the City and obtain clarification or addendum prior to submitting any bid. **Any addenda issued will be posted with the documents at the web address mentioned in 1 above no later than two business days prior to the Bid Opening Date. Prior to submitting a bid, the bidder is responsible for determining if any addenda have been issued and for following any instructions required in any addenda issued.**

3. **It shall be the responsibility of the bidder to see that his bid is received at the place and time named in the Notice to Bidders in the Project Manual**. Bids received after the scheduled opening time will be returned unopened.

4. Bids shall be submitted in sealed envelopes plainly marked "Sealed Bid" and showing the name of the project, the job number if applicable, and the opening date and time.

5. **Bidders shall be responsible for submitting a copy of the City's Bid Form, Bid Bond Form, and Statement of Bidder's Safety Experience from the Project Manual documents posted at the web address as described in 1 above.**

6. Bids shall be accompanied by a bid security consisting of a certified cashier's check in an amount not less than five percent (5%) of the total maximum bid price, payable without recourse to the City of Round Rock, or a bid bond in the same amount from a reliable surety company, as a guarantee that the bidder will enter into a contract and execute performance and payment bonds, as stipulated by item 15 below, within ten (10) days after notice of award of contract to him. Bid securities must be submitted in the same sealed envelope with the bid. Bids submitted without a bid security may not be considered at the sole discretion of the City.

7. **If awarded the bid, the bidder must complete a Form 1295 electronically on the Texas Ethics Commission (TEC) Website at https://www.ethics.state.tx.us/whatsnew/elf_info_form1295.htm and submit the signed and notarized Form 1295 within ten (10) business days of notification of the award. Instructions for completing a Form 1295 are attached as Exhibit "A" to the Instructions to Bidders.**

8. No conditional bids will be accepted.

9. A bidder wishing to withdraw his submitted sealed bid prior to the scheduled bid opening time must do so by presenting in person a written request signed by an authorized representative of the bidder to a City employee at the location for which sealed bids are to be addressed. No telephone, facsimile, or email requests will be accepted. The City will expend the time and effort that the City in its sole discretion determines is necessary to investigate the authenticity of a request before complying with a request. The City shall in its sole discretion determine if the City will comply with a request and the City shall not be held liable for not complying with a request. If the City does not comply with a request, the request shall automatically become null and void.

10. A bidder wishing to revise his sealed bid after submittal but before the scheduled bid opening time must first withdraw his bid as provided for in the Instructions to Bidders and then submit a sealed bid in accordance with the Instructions to Bidders. No revisions to a bid will be allowed after the scheduled bid opening time. The bidder shall be responsible for ensuring the amount of the bid security is as specified in the Instructions to Bidders.

11. All bid securities will be returned to the respective bidders within twenty-five (25) days after bids are opened, except those which the City elects to hold until the successful bidder has executed the Agreement. Thereafter, all remaining securities, including security of the successful bidder, will be returned within sixty (60) days.

12. Until the award of the contract, the City reserves the right to reject any and all bids and to waive technicalities; to advertise for new bids; or to do the work otherwise when the best interest of the City will be thereby promoted.

13. In case of ambiguity or lack of clarity in the statement of prices in the bids, the City reserves the right to consider the most favorable analysis thereof, or to reject the bid. Unreasonable and/or unbalanced prices submitted in a bid may result in rejection of such bid or other bids.

14. Award of the contract, if awarded, will be made within sixty (60) days after opening of the bids, and no bidder may withdraw his bid within said sixty (60) day period of time unless a prior award is made. A Notice to Proceed will be issued within sixty (60) days after contract Execution Date as defined in the General Conditions.

15. Within ten (10) days after written notification of award of the contract, the successful bidder must furnish a performance bond and a payment bond in the amount of one hundred

percent (100%) of the total Contract Amount. Said performance bond and payment bond shall be from an approved surety company holding a permit from the State of Texas, indicating it is authorized and admitted to write surety bonds in this state. In the event the bond exceeds $100,000.00, the surety must also (1) hold a certificate of authority from the United States secretary of the treasury to qualify as a surety on obligations permitted or required under federal law; or (2) have obtained reinsurance for any liability in excess of $100,000.00 from a reinsurer that is authorized and admitted as a reinsurer in this state and is the holder of a certificate of authority from the United States secretary of the treasury to qualify as a surety or reinsurer on obligations permitted or required under federal law.

In determining whether the surety or reinsurer holds a valid certificate of authority, the City may rely on the list of companies holding certificates of authority as published in the Federal Register covering the date on which the bond is to be executed.

16. Failure to execute the Agreement within ten (10) days of written notification of award or failure to furnish the performance bond and payment bond as required by item 15 above, shall be just cause for the annulment of the award. In case of annulment of the award, the bid security shall become the property of the City, not as a penalty, but as liquidated damages.

17. No contract shall be binding upon the City until it has been signed by its Mayor after having been duly authorized to do so by the City Council.

18. The Contractor shall not commence Work under the Agreement until he has furnished certification of all insurance required and such has been approved by the City, nor shall the Contractor allow any Subcontractor to commence work on his subcontract until proof of all similar insurance that is required of the subcontractor has been furnished and approved. The Contractor's insurer shall use the certificate of insurance form included in the bid documents or the standard ACORD form.

19. If the bidder's insurance company is authorized, pursuant to its agreement with bidder, to arrange for the replacement of a loss, rather than by making a cash payment directly to the City, the insurance company must furnish or have furnished by bidder, a performance bond in accordance with Section 2253.021(b), Texas Government Code, and a payment bond in accordance with Section 2253.021(c).

20. Any quantities given in any portion of the Bid Documents, including the drawings (plans), are estimates only, and the actual amount of work required may differ somewhat from the estimates. The basis for payment shall be the actual amount of work done and/or material furnished as specified in the General Conditions.

21. Bids shall be submitted on a separated contract basis. No Texas sales tax shall be included in the prices bid for materials consumed or incorporated into the Work. This contract is issued by an organization which is qualified for exemption pursuant to the provisions of Section 151.309(5) of the Texas Tax Code. The City will issue an exemption certificate to the Contractor. The Contractor must then issue a resale certificate to the material supplier

for materials purchased. The Contractor must have a valid sales tax permit in order to issue a resale certificate.

Upon obtaining consumable materials, the Contractor will issue a resale certificate in lieu of payment of sales tax, and the following conditions shall be observed;

1) The Contractor will transfer title of consumable, but not incorporated, materials to the City at the time and point of receipt by the Contractor;
2) The Contractor will be paid for these consumable materials by the City as soon as practicable. Payment will not be made directly but considered subsidiary to the pertinent bid item. The Contractor's monthly estimate will state that the estimate includes consumables that were received during the month covered by the estimate; and
3) The designated representative of the City must be notified as soon as possible of the receipt of these materials so that an inspection can be made by the representative. Where practical, the materials will be labeled as the property of the City.

22. The Contractor, after execution of the contract and pursuant to Internal Revenue Service (IRS) regulations, shall furnish its Taxpayer Identification Number (TIN) to the City. The Contractor shall provide the appropriate information on a W-9 form (which can be provided by the City upon request). This form shall be submitted directly to the City's Accounts Payable Department to ensure security of the information.

23. If the Bid Form includes Add and/or Deduct Alternate bid items and/or otherwise provides for Alternate bids, the City will determine whether to select or not select one or more of the Add and/or Deduct Alternate bid items and/or Alternate bids at the City's sole discretion and for its greatest advantage. If the City selects any Add and/or Deduct Alternate bid items, the total bid amount will be determined by adding the amount of the selected Add Alternate(s) to, and deducting the amount of the selected Deduct Alternate(s) from the Base Bid or the selected Alternate bid.

EXHIBIT "A"
FORM 1295 INSTRUCTIONS

Pursuant to newly enacted Section 2252.90 of the Texas Government Code, as of January 1, 2016, any business entity entering into a contract with a local government that requires approval of the governing body must submit a disclosure of interested parties to the local governmental prior to the execution of the contract. The Texas Ethics Commission (TEC) has adopted a form for the disclosure of interested parties (Form 1295) and has created a website application for business entities to submit the required information.

The City of Round Rock may not enter into a contract that requires the approval of the City Council until the business entity that is a party to the contract files a Form 1295 with the City Clerk. The instructions to complete Form 1295 and file it with the City Clerk are as follows:

1. Upon being notified of a bid award, the award recipient ("business entity") must go to the following website: https://www.ethics.state.tx.us/whatsnew/elf_info_form1295.htm and follow the login directions on the website application to complete a Form 1295. If this is a business entity's first time logging on to the website application, the business entity must create a login Username and Password and then follow the application's instructions to complete a Form 1295.

2. The City does not have a Contract ID Number System. Please insert the project name in this box.

3. Even if a business entity has no interested parties, Form 1295 still must be completed using the website application and filed with the City Clerk.

4. Once confirmation is received that the information has been submitted, the business entity MUST print, sign and notarize the printed out completed Form 1295.

5. **The signed and notarized Form 1295 must be filed with the Clerk of the City of Round Rock within ten (10) business days of the date of notification of the award. The signed and notarized Form 1295 may be scanned and e-mailed to swhite@roundrocktexas.gov OR mailed or hand-delivered to the address below.**

6. Once the City Clerk receives the signed and notarized Form 1295, the City Clerk will submit confirmation of receipt through the TEC website application within thirty (30) days of the filing of Form 1295.

7. This process must be followed for each contract a business entity enters into with the City of Round Rock.

8. A Form 1295 cannot be handwritten. It must be completed electronically through the TEC website application.

9. If you have any questions regarding the filing of Form 1295, please contact:

   Sara White, City Clerk
   221 East Main Street
   Round Rock, Texas 78664
   Phone: (512) 218-5404
   Fax: (512) 218-7097
   E-mail: swhite@roundrocktexas.gov

00200 BID BOND

BID BOND

THE STATE OF TEXAS §
§ KNOW ALL BY THESE PRESENTS:
COUNTY OF WILLIAMSON §

That ______________________________ of the City of ____________________________ County of ____________________________ State of ______________________ as Principal, and ____________________________ authorized under the laws of the State of Texas to act as surety on bonds for principals, are held and firmly bound unto the **CITY OF ROUND ROCK, TEXAS ("Owner"),** in the penal sum of Five Percent (5%) of the total amount of the Bid of the Principal submitted to the Owner, for the Work described below; for the payment whereof, well and truly to be made, and the said Principal and Surety do herby bind themselves and their heirs, administrators, executors, successors and assigns, jointly and severally, as follows:

In no case shall the liability of the Surety hereunder exceed the sum of (______________ ______________________________ Dollars ($____________________).

THE CONDITIONS OF THIS OBLIGATION ARE SUCH that, whereas, the Principal has submitted the above-referenced Bid to the Owner, for construction of the Work under the "Specifications for Construction of Greenlawn Storm Drainage Improvements ____" for which Bids are to be opened at the office of Owner on the 30th day of August, 20 16 .

NOW, THEREFORE, if the Principal is awarded the Contract, and within the time and manner required under the "Instructions to Bidders," after the prescribed forms are presented to her/him for signature, enters into a written Agreement substantially in the form contained in the Bid Documents, in accordance with the Bid, and files the two (2) bonds with the Owner, one to guarantee faithful performance and the other to guarantee payment for labor and materials, then this obligation shall be null and void; otherwise, it shall be and remain in full force and effect.

In the event that suit is brought upon this Bond by the Owner and judgment is recovered, said Surety shall pay all costs incurred by the Owner in such suit, including a reasonable attorney's fee to be fixed by the Court.

IN WITNESS WHEREOF, the said Principal and Surety have signed this instrument on this the ________________ day of the month of ________________ 20____.

______________________________	______________________________
Principal	Surety
______________________________	______________________________
Printed Name	Printed Name
By: ___________________________	By: ___________________________
Title: _________________________	Title: _________________________
Address: _______________________	Address: _______________________
_______________________	_______________________

Resident Agent of Surety:

_____

Signature

_____

Printed Name

_____

Street Address

_____

City, State, Zip

00300 BID FORM

BID FORM

PROJECT NAME: Greenlawn Storm Drainage Improvements

PROJECT LOCATION: Round Rock, Texas

OWNER: City of Round Rock, Texas

DATE: August 30, 2016

Gentlemen:

Pursuant to the foregoing Notice to Bidders and Instructions to Bidders, the undersigned bidder hereby proposes to do all the Work, to furnish all necessary superintendence, labor, machinery, equipment, tools, materials, insurance and miscellaneous items, to complete all the Work on which he bids as provided by the attached Bid Documents, and as shown on the plans for the construction of Greenlawn Storm Drainage Improvements and binds himself on acceptance of this bid to execute the Agreement and bond for completing said Work within the time stated, for the following prices, to wit:

Any addenda issued will be posted with the Project Manual and/or Contract Documents on the City's website at www.roundrocktexas.gov/utilitiescip by the close of business on August 26, 2016. Prior to submitting a bid, the bidder is responsible for determining if any addenda have been issued and for following any instructions in any addenda issued.

Bidder acknowledges receipt of the following Addenda by listing Addendum "number" and "date".

_____ _____

_____ _____

_____ _____

BASE BID

Bid Item	Approx. Quantity	Unit	Item Description and Written Unit Price	Unit Price	Amount
1	500	CY	Channel Excavation, complete in place, per Cubic Yard for _____ dollars and _____ cents.	_____	_____
2	755	SY	Concrete-Lined Channel, Including Structural Excavation, Backfill and Stone Leveling Pad, complete in place, per Square Yard for _____ dollars and _____ cents.	_____	_____

BASE BID

Bid Item	Approx. Quantity	Unit	Item Description and Written Unit Price	Unit Price	Amount
3	40	LF	Remove and Replace P.C. Concrete Curb and Gutter at road median, complete in place, per Linear Foot		
			for _____ dollars		
			and _____ cents.	_____	_____
4	350	SF	Remove and Replace P.C. Concrete Sidewalks, complete in place, per Square Foot		
			for _____ dollars		
			and _____ cents.	_____	_____
5	2	EA	Junction Box, 5FT.X 5FT., complete in place, per Each		
			for _____ dollars		
			and _____ cents.	_____	_____
6	1	EA	10-ft Curb Inlet, Including Curb and Gutter Transitions, complete in place, per Each		
			for _____ dollars		
			and _____ cents.	_____	_____
7	2	EA	20-ft Curb Inlet (two PCU inlets with extensions), Incl. Curb and Gutter Transitions, complete in place, per Each		
			for _____ dollars		
			and _____ cents.	_____	_____
8	1	EA	Headwall for Box Culvert, complete in place, per Each		
			for _____ dollars		
			and _____ cents.	_____	_____

BASE BID

Bid Item	Approx. Quantity	Unit	Item Description and Written Unit Price	Unit Price	Amount
9	287	LF	Trench Excavation Safety Protection Systems, Including Submission of Trench Safety Plan (all depths), complete in place, per Linear Foot for _____ dollars and _____ cents.	_____	_____
10	20	LF	24-Inch Dia RCP, Class-III, Including Excavation, Bedding and CLSM Backfill, complete in place, per Linear Foot for _____ dollars and _____ cents.	_____	_____
11	110	LF	36-Inch Dia RCP, Class-III, Including Excavation, Bedding and CLSM Backfill, complete in place, per Linear Foot for _____ dollars and _____ cents.	_____	_____
12	57	LF	42-Inch Dia RCP, Class-III, Including Excavation, Bedding and CLSM Backfill, complete in place, per Linear Foot for _____ dollars and _____ cents.	_____	_____
13	145	SY	2" Type D HMAC Surface Patch, complete in place, per Square Yard for _____ dollars and _____ cents.	_____	_____

BASE BID

Bid Item	Approx. Quantity	Unit	Item Description and Written Unit Price	Unit Price	Amount
14	100	LF	Precast Concrete Box Culverts (5 FT. X 2 FT.), Including Excavation, Bedding and Backfill, complete in place, per Linear Foot for _____ dollars and _____ cents.	_____	_____
15	2205	SY	Non-Native Seeding for Erosion Control with Fiber Mulch, complete in place, per Square Yard for _____ dollars and _____ cents.	_____	_____
16	355	SY	Soil Retention Blanket, Class 2 - Type G, complete in place, per Square Yard for _____ dollars and _____ cents.	_____	_____
17	211	LF	Tree Protection Fencing (Chain Link), complete in place, per Linear Foot for _____ dollars and _____ cents.	_____	_____
18	48	LF	Sediment Containment Dikes w/Filter Fabric, complete in place, per Linear Foot for _____ dollars and _____ cents.	_____	_____
19	3	EA	Sediment Containment Dikes for New Inlets, complete in place, per Each for _____ dollars and _____ cents.	_____	_____

BASE BID

Bid Item	Approx. Quantity	Unit	Item Description and Written Unit Price	Unit Price	Amount
20	2	EA	Sediment Containment Dikes for Existing Inlets, complete in place, per Each for _____ dollars and _____ cents.	_____	_____
21	33	LF	Rock Berm, complete in place, per Linear Foot for _____ dollars and _____ cents.	_____	_____
22	404	LF	Erosion Control Logs, complete in place, per Linear Foot for _____ dollars and _____ cents.	_____	_____
23	200	LF	Fencing for Excavations, complete in place, per Linear Foot for _____ dollars and _____ cents.	_____	_____
24	1	LS	Barricades, Signs, and Traffic Handling, complete in place, per Lump Sum for _____ dollars and _____ cents.	_____	_____

BASE BID

Bid Item	Approx. Quantity	Unit	Item Description and Written Unit Price	Unit Price	Amount
25	1	EA	Stabilized Construction Entrance, complete in place, per Each for _____ dollars and _____ cents.	_____	_____
26	1	LS	Special Ground Treatment near Sta. 4+00, Including Fabric and Gravel, complete in place, per Lump Sum for _____ dollars and _____ cents.	_____	_____

TOTAL BASE BID (Items 1 thru 26) _____

Materials: _____
All Other Charges: _____
*** Total:** _____

*** Note:** This total must be the same amount as shown above for **"Total Base Bid"**

BID FORM

ADD ALTERNATE No. 1

Note: Add Alternate No. 1 would provide surface/edge milling, overlay, and re-striping of Greenlawn Boulevard from Parkside Circle to Gattis School Road. If this add alternate is selected by the City, the "2-Inch Type D HMAC Surface Patch" included in item 12 in the Base Bid will not be performed.

Bid Item	Approx. Quantity	Unit	Item Description and Written Unit Price	Unit Price	Amount
AA1-1	2580	SY	Surface/Edge Milling for Asphaltic Concrete Pavement (2" depth), complete in place, per Square Yard for _____ dollars and _____ cents.	_____	_____
AA1-2	300	TON	Hot Mix Asphaltic Concrete Pavement - Type D (2" Overlay), complete in place, per Ton for _____ dollars and _____ cents.	_____	_____
AA1-3	2300	LF	Thermoplastic Pavement Markings, White and/or Yellow, Including Stripes, Words and Arrows, complete in place, per Linear Foot for _____ dollars and _____ cents.	_____	_____
AA1-4	1	LS	Barricades, Signs, and Traffic Handling, complete in place, per Lump Sum for _____ dollars and _____ cents.	_____	_____

TOTAL ADD ALTERNATE No. 1 (Items AA1-1 thru AA1-4) _____

Materials: _____

All Other Charges: _____

*** Total:** _____

*** Note:** This total must be the same amount as shown above for **"Total Add Alternate No. 1"**

BID FORM

ADD ALTERNATE No. 2

Note: Add Alternate No. 2 would provide an alternative design for the 20' inlets in Greenlawn Blvd. If Add Alternate No. 2 is selected by the City, Base Bid Item No. 7 would not be performed.

Bid Item	Approx. Quantity	Unit	Item Description and Written Unit Price	Unit Price	Amount
AA2-1	2	EA	20-ft Curb Inlet (two 10-ft Type II R inlets installed end to end), complete in place, per Each for _____ dollars and _____ cents.	_____	_____

TOTAL ADD ALTERNATE No. 2 (Item AA2-1) _____

Materials: _____
All Other Charges: _____
*** Total:** _____

*** Note:** This total must be the same amount as shown above for **"Total Add Alternate No. 2"**

BID FORM

ADD ALTERNATE No. 3

Note: If selected by the City, Add Alternate No. 3 would add a color to the concrete used for the "Concrete-Lined Channel" in item 2 of the Base Bid. See Attachment A in Section 01000 "Technical Specifications" of the Project Manual.

Bid Item	Approx. Quantity	Unit	Item Description and Written Unit Price	Unit Price	Amount
AA3-1	755	SY	Integral color for Concrete-Lined Channel, complete in place, per Square Yard for _____ dollars and _____ cents.	_____	_____

TOTAL ADD ALTERNATE No. 3 (Item AA3-1) _____

Materials: _____
All Other Charges: _____
*** Total:** _____

* **Note:** This total must be the same amount as shown above for **"Total Add Alternate No. 3"**

BID FORM

ADD ALTERNATE No. 4

Note: If selected by the City, Add Alternate No. 4 would add stamping of the horizontal bottom surface of the "Concrete-Lined Channel" in item 2 of the Base Bid. See Attachment A in Section 01000 "Technical Specifications" of the Project Manual.

Bid Item	Approx. Quantity	Unit	Item Description and Written Unit Price	Unit Price	Amount
AA4-1	450	SY	Stamping for Concrete-Lined Channel, complete in place, per Square Yard		

for _____ dollars

and _____ cents. _____ _____

TOTAL ADD ALTERNATE No. 4 (Item AA4-1) _____

Materials: _____
All Other Charges: _____
*** Total:** _____

*** Note:** This total must be the same amount as shown above for **"Total Add Alternate No. 4"**

If this bid is accepted, the undersigned agrees to execute the Agreement and provide necessary bonds and insurance certification as per the Instructions to Bidders.

The undersigned certifies that the bid prices contained in the bid have been carefully checked and are submitted as correct and final. The Owner reserves the right to reject any or all bids and may waive any informalities or technicalities.

Respectfully Submitted,

_____ _____
Signature

_____ _____
Print Name — Address

_____ _____
Title — Telephone

_____
Name of Firm

_____ _____
Date — Secretary, if Bidder is a Corporation

00410 STATEMENT OF BIDDER'S SAFETY EXPERIENCE

Statement of Bidder's Safety Experience

Section 00410

Bidder must submit a signed Statement of Bidder's Safety Experience form with his Bid; failure to do so will constitute an incomplete Bid that may be rejected. In order to make a responsive Bid, Bidder must provide evidence that it meets minimum OSHA construction safety program requirements, has not been fined by OSHA for any willful safety violations in the past three years, and has a lost time injury rate that doesn't exceed the limits established below. All questions must be answered and data given must be clear and comprehensive. If necessary, questions may be answered on separate attached sheets.

Company Name: _____

Address: _____ Phone: _____

Completed by: _____ Date: _____

1. Does the company have a written construction Safety program? ☐Yes ☐No
2. Does the company conduct construction safety inspections? ☐Yes ☐No
3. Does the company have an active construction safety-training program? ☐Yes ☐No
4. Has the company been fined by OSHA for any willful safety violations in the past three years? ☐Yes ☐No
5. Does the company have a lost time injury rate of 7.8 for SIC 15, or 7.6 for SIC 16, or less over the past three years? ☐Yes ☐No

   Attach the company's OSHA 200/300 logs for the past three years.

6. Does the company or affected subcontractors have competent persons in the following Areas?

   A. Scaffolding ☐Yes ☐No ☐N/A
   B. Excavation ☐Yes ☐No ☐N/A
   C. Cranes ☐Yes ☐No ☐N/A
   D. Electrical ☐Yes ☐No ☐N/A
   E. Fall Protection ☐Yes ☐No ☐N/A
   F. Confined Spaces ☐Yes ☐No ☐N/A

I hereby certify that the above information is true and correct.

Signature _____ Title _____

00500 AGREEMENT

City of Round Rock, Texas
Standard Form of Agreement between
Owner and Contractor

AGREEMENT made as of the _____ ( ) day of _____ in the year 20___.

BETWEEN the Owner: City of Round Rock, Texas (hereafter "Owner" or "City")
221 East Main Street
Round Rock, Texas 78664

and the Contractor _____ ("Contractor")

The Project is described as: Greenlawn Storm Drainage Improvements

The Engineer is: City of Round Rock
2008 Enterprise Drive
Round Rock, TX 78664

For and in consideration of the mutual terms, conditions and covenants of this Agreement and all accompanying documents between Owner and Contractor, the receipt and sufficiency of which are hereby acknowledged, Owner and Contractor agree as follows:

ARTICLE I THE CONTRACT DOCUMENTS

The Contract Documents consist of this Agreement, Conditions of the Contract (General, Supplementary and other Conditions), Drawings, Specifications, Addenda issued prior to execution of this Agreement, other documents listed in this Agreement and Modifications issued after execution of this Agreement; these form the Contract, and are as fully a part of the Contract as if attached to this Agreement or repeated herein. The Contract represents the entire and integrated agreement between the parties hereto and supersedes prior negotiations, representations or agreements, either written or oral. An enumeration of the Contract Documents, other than Modifications, appears in Article 7.

ARTICLE 2 THE WORK OF THIS CONTRACT

Contractor shall fully execute the Work described in the Contract Documents, except to the extent specifically indicated in the Contract Documents to be the responsibility of others.

ARTICLE 3 DATE OF COMMENCEMENT; DATE OF SUBSTANTIAL COMPLETION; DATE OF FINAL COMPLETION

3.1 The date of commencement of the Work shall be the date of this Agreement unless a different date is stated below or provision is made for the date to be fixed in a Notice to Proceed issued by Owner.

3.2 The Contract Time shall be measured from the date delineated in the Notice to Proceed.

3.3 Contractor shall commence Work within seven (7) calendar days from the date delineated in the Notice to Proceed.

3.4 Contractor shall achieve Substantial Completion of the items of Work listed on Attachment A to this Agreement no later than sixty (60) calendar days from issuance by Owner of Notice to Proceed, and Contractor shall achieve Substantial Completion of the entire Work no later than seventy-five (75) calendar days from issuance by Owner of Notice to Proceed, subject to adjustments of this Contract Time as provided in the Contract Documents.

3.5 If Contractor fails to achieve Substantial Completion of the Work (or any portion thereof) on or before the date(s) specified for Substantial Completion in the Agreement, Contractor shall pay to Owner, as liquidated damages, the sum of one thousand and No/100 Dollars ($ 1,000.00) for each calendar day that Substantial Completion is delayed after the date(s) specified for Substantial Completion. It is hereby agreed that the liquidated damages to which Owner is entitled hereunder are a reasonable forecast of just compensation for the harm that would be caused by Contractor's failure to achieve Substantial Completion of the Work (or any portion thereof) on or before the date(s) specified for Substantial Completion in the Agreement. It is agreed that the harm that would be caused by such failure, which includes loss of expected use of the Project areas, provision of alternative storage facilities and rescheduling of moving and occupancy dates, is one that is incapable or very difficult of accurate estimation. It is hereby agreed that if Substantial Completion of the Work (or any portion thereof) is not achieved on or before thirty (30) days after the date(s) specified for Substantial Completion in the Agreement, the Owner shall have the option to either collect liquidated damages as set forth herein or to thereafter rely on its remedies under the Contract Documents and at law and in equity, including without limitation, the recovery of actual damages. The date(s) specified for Substantial Completion of the Work (or any portion thereof) in the Agreement shall be subject to adjustment as provided in the Contract Documents.

3.6 Contractor shall achieve Final Completion of the entire Work no later than ninety (90) calendar days from issuance by Owner of Notice to Proceed.

ARTICLE 4 CONTRACT SUM

4.1 Owner shall pay Contractor the Contract Sum in current funds for Contractor's performance of the Contract. The Contract Sum shall be _____

_____

($_____), subject to additions and deductions as provided in the Contract Documents.

4.2 Does the Contract Sum include alternates which are described in the Bid Form?
No _____. Yes _____. If yes, please provide details below:

_____ _____
_____ _____
_____ _____
_____ _____

ARTICLE 5 PAYMENTS

5.1 PROGRESS PAYMENTS

5.1.1 Based upon Applications for Payment submitted to Engineer and Owner by Contractor, and Certificates for Payment issued by Engineer and not disputed by Owner and/or Owner's lender, Owner shall make progress payments on account of the Contract Sum to Contractor as provided below, in Article 14 of the City of Round Rock General Conditions, and elsewhere in the Contract Documents.

5.1.2 The period covered by each Application for Payment shall be one calendar month ending on the last day of the month.

5.1.3 Provided that an Application for Payment is received by Engineer and Owner, and Engineer issues a Certificate of Payment not later than the tenth (10th) day of a month, Owner shall make payment to Contractor not later than the tenth (10th) day of the next month. If an Application for Payment is received by Engineer and Owner after the application date fixed above, payment shall be made by Owner not later than one month after the Engineer issues a Certificate for Payment.

5.1.4 Each Application for Payment shall be based on the most recent schedule of values submitted by Contractor in accordance with the Contract Documents. The schedule of values shall allocate the entire Contract Sum among the various portions of the Work. The schedule of values shall be prepared in such form and supported by such data to substantiate its accuracy as Engineer and Owner may require. This schedule, unless objected to by Engineer or Owner, shall be used as a basis for reviewing Contractor's Applications for Payment.

5.1.5 Applications for Payment shall warrant the percentage of completion of each portion of the Work as of the end of the period covered by the Application for Payment.

5.1.6 Subject to other provisions of the Contract Documents, the amount of each progress payment shall be computed as provided in Article 14 of the City of Round Rock General Conditions.

5.1.7 Except with Owner's prior written approval, Contractor shall not make advance payments to suppliers for materials or equipment which have not been delivered and stored at the site.

5.2 FINAL PAYMENT

5.2.1 Final payment, constituting the entire unpaid balance of the Contract Sum, shall be made by Owner to Contractor when:

.1 Contractor has fully performed the Contract except for Contractor's responsibility to correct Work, and to satisfy other requirements, if any, which extend beyond final payment; and

.2 a final Certificate for Payment has been issued by Engineer.

5.2.2 Owner's final payment to Contractor shall be made no later than thirty (30) days after the issuance of Engineer's final Certificate for Payment. In no event shall final payment be required to be made prior to thirty (30) days after all Work on the Contract has been fully performed. Defects in the Work discovered prior to final payment shall be treated as non-conforming Work and shall be corrected by Contractor prior to final payment, and shall not be treated as warranty items.

ARTICLE 6 TERMINATION OR SUSPENSION

6.1 The Contract may be terminated by Owner or Contractor as provided in Article 15 of the City of Round Rock General Conditions.

6.2 The Work may be suspended by Owner as provided in Article 15 of the City of Round Rock General Conditions.

ARTICLE 7 ENUMERATION OF CONTRACT DOCUMENTS

7.1 The Contract Documents, except for Modifications issued after execution of this Agreement, are enumerated as follows:

7.1.1 The Agreement is this executed version of the City of Round Rock, Texas Standard Form of Agreement between Owner and Contractor, as modified.

7.1.2 The General Conditions are the "City of Round Rock Contract Forms 00700," General Conditions, as modified.

7.1.3 The Supplementary, Special, and other Conditions of the Contract are those contained in the Project Manual dated August 2016.

7.1.4 The Specifications are those contained in the Project Manual dated August 2016.

7.1.5 The Drawings, if any, are those contained in the Project Manual dated August 2016.

7.1.6 The Insurance & Construction Bond Forms of the Contract are those contained in the Project Manual dated August 2016.

7.1.7 The Notice to Bidders, Instructions to Bidders, Bid Form, and Addenda, if any, are those contained in the Project Manual dated August 2016.

7.1.8 If this Agreement covers construction involving federal funds, thereby requiring inclusion of mandated contract clauses, such federally required clauses are those contained in the "City of Round Rock Contract Forms 03000," Federally Required Contract Clauses, as modified.

7.1.9 Other documents, if any, forming part of the Contract Documents are as follows:

_____

ARTICLE 8 MISCELLANEOUS PROVISIONS

8.1 Where reference is made in this Agreement to a provision of any document, the reference refers to that provision as amended or supplemented by other provisions of the Contract Documents.

8.2 Owner's representative is:

Danny Halden, P.E., City Engineer
2008 Enterprise Drive
Round Rock, TX 78664
dhalden@roundrocktexas.gov (512) 218-6610

8.3 Contractor's representative is:

_____
_____
_____
_____

8.4 Neither Owner's nor Contractor's representative shall be changed without ten (10) days' written notice to the other party.

8.5 Waiver of any breach of this Agreement shall not constitute waiver of any subsequent breach.

8.6 Owner agrees to pay Contractor from available funds for satisfactory performance of this Agreement in accordance with the bid or proposal submitted therefor, subject to proper additions and deductions, all as provided in the General Conditions, Supplemental Conditions, and Special Conditions of this Agreement, and Owner agrees to make payments on account thereof as provided therein. Lack of funds shall render this Agreement null and void to the extent funds are not available. This Agreement is a commitment of City of Round Rock's current revenues only.

8.7 Although this Agreement is drawn by Owner, both parties hereto expressly agree and assert that, in the event of any dispute over its meaning or application, this Agreement shall be interpreted reasonably and fairly, and neither more strongly for nor against either party.

8.8 This Agreement shall be enforceable in Round Rock, Texas, and if legal action is necessary by either party with respect to the enforcement of any or all of the terms or conditions herein, exclusive venue for same shall lie in Williamson County, Texas. This Agreement shall be governed by and construed in accordance with the laws and court decisions of the State of Texas.

8.9 Both parties hereby expressly agree that no claims or disputes between the parties arising out of or relating to this Agreement or a breach thereof shall be decided by an arbitration proceeding, including without limitation, any proceeding under the Federal Arbitration Act (9 USC Section 1-14) or any applicable state arbitration statute.

8.10 The parties, by execution of this Agreement, bind themselves, their heirs, successors, assigns, and legal representatives for the full and faithful performance of the terms and provisions hereof.

This Agreement is entered into as of the day and year first written above and is executed in at least three (3) original copies, of which one is to be delivered to Contractor, one to Engineer for use in the administration of the Contract, and the remainder to Owner.

OWNER

CITY OF ROUND ROCK, TEXAS

_____

Printed Name: _____

Title _____

Date Signed: _____

CONTRACTOR

_____

_____

Printed Name: _____

Title: _____

Date Signed: _____

ATTEST:

_____
City Clerk

FOR CITY, APPROVED AS TO FORM:

_____
City Attorney

Attachment A to the Agreement for
Greenlawn Storm Drainage Improvements

Items of Work to be substantially completed no later than sixty (60) calendar days from the date of Notice to Proceed issued by the Owner:

Base Bid Items 1 through 14, and 17 through 25.

00600 INSURANCE AND CONSTRUCTION BOND FORMS

BONDS AND INSURANCE INSTRUCTIONS

Instruction Sheet

1. Insurance Company must be licensed by State of Texas.

2. Agent signing bonds must be licensed in Texas.

3. Agent signing bonds must have Power of Attorney on behalf of insurance company.

4. If Agent signing bonds has Power of Attorney, but not licensed in Texas, then the bond must be counter-signed by Texas local recording agent.

ALL THE ABOVE INFORMATION CAN BE FOUND AT
Texas Department of Insurance website –www.tdi.state.tx.us

5. Make sure the dollar amount on both Performance and Payment Bonds match the amount of the Agreement & Bid Form Sheet.

6. Both Performance and Payment Bonds should be signed by Authorized Person. If the contractor is a corporation, then it should be signed by the President or the Vice-President. If the contractor is not incorporated, then it may be signed by the Owner. Please state the title of the authorized person.

CERTIFICATE OF LIABILITY INSURANCE
Instruction Sheet

1. **CERTIFICATE OF LIABILITY INSURANCE FORM**
The City of Round Rock's Certificate of Liability Insurance form provided herein or a standard ACORD form.

2. **PRODUCER** and **INSURED** - Please list name, address, phone number and e-mail.

3. **COMPANIES AFFORDING COVERAGE** – TDI number required. The TDI number can be obtained from the Texas Dept of Insurance Website: http://www.tdi.state.tx.us/. – Company Lookup.

   Note: Exception to this rule. In certain instances where there is unusual risks involved, **Surplus Lines Insurance Carriers** can be used. Below are the guidelines:

   a. **Insurance Company does not have to be "licensed in Texas", but they do have to be "*eligible* for a Texas license."**
   Please verify with the Texas Dept of Insurance
   Website: http://www.tdi.state.tx.us/. – Company Lookup

   b. **Policy has to be written by licensed surplus lines Agent.**
   Also verify with the Texas Dept of Insurance
   Website: http://www.tdi.state.tx.us/ - Agent Lookup

4. **TYPES OF INSURANCE COVERAGE –**

   CONSTRUCTION CONTRACT: Please double check the **General Conditions and the Supplemental General Conditions** for the types and amounts of insurance required. The Supplemental General Conditions usually state the following:

   a. **Business Automobile Liability Insurance**
   b. **Workers' Compensation and Employers' Liability Insurance**
   c. **Commercial General Liability Insurance**
   d. **Builders' Risk Insurance** – (Generally required for all "vertical" construction. Check with Project Manager for requirements.)

   FOR ALL OTHER CONTRACTS, PLEASE REFER TO THE INSURANCE SECTION FOR TYPE OF INSURANCE REQUIRED. (For example Engineering Service Contracts usually require "professional liability insurance".)

5. **EFFECTIVE DATE & EXPIRATION DATE**
Please make sure dates are current.

6. City of Round Rock must be listed on the Certificate of Insurance as an additional insured (except Workers Compensation and Builders Risk).

7. Certificate must indicate that the insurance Company must give the City of Round Rock notice of any changes, cancellation , etc. at least thirty (30) days prior to date of change.

8. **Make sure Certificate is signed by an Agent Licensed in the State of Texas, this can also be found on the Texas Department of Insurance website –www.tdi.state.tx.us – Agent Lookup.**

PERFORMANCE BOND

THE STATE OF TEXAS §
§ KNOW ALL BY THESE PRESENTS:
COUNTY OF WILLIAMSON §

That _____ of the City of _____, County of _____, and State of _____, as Principal, and _____ authorized under the law of the State of Texas to act as surety on bonds for principals, are held and firmly bound unto **THE CITY OF ROUND ROCK, TEXAS, (Owner),** in the penal sum of _____ Dollars ($ _____) for the payment whereof, well and truly to be made the said Principal and Surety bind themselves, and their heirs, administrators, executors, successors and assigns, jointly and severally, by these presents:

WHEREAS, the Principal has entered into a certain written Agreement with the Owner dated the _____ day of _____, 20__ to which the Agreement is hereby referred to and made a part hereof as fully and to the same extent as if copied at length herein consisting of: Greenlawn Storm Drainage Improvements _____ _____ (Name of the Project)

NOW, THEREFORE, THE CONDITIONS OF THIS OBLIGATION IS SUCH, that if the said Principal shall faithfully perform said Agreement and shall, in all respects, duly and faithfully observe and perform all and singular the covenants, conditions and agreements in and by said Agreement, agreed and covenanted by the Principal to be observed and performed, including but not limited to, the repair of any and all defects in said work occasioned by and resulting from defects in materials furnished by or workmanship of, the Principal in performing the Work covered by said Agreement and occurring within a period of twelve (12) months from the date of Final Completion and all other covenants and conditions, according to the true intent and meaning of said Agreement and the Plans and Specifications hereto annexed, then this obligation shall be void; otherwise to remain in full force and effect;

PROVIDED, HOWEVER, that this bond is executed pursuant to the provisions of Chapter 2253, Texas Government code, as amended, and all liabilities on this bond shall be determined in accordance with the provisions of said Chapter 2253 to the same extent as if it were copied at length herein.

PERFORMANCE BOND (continued)

Surety, for value received, stipulates and agrees that no change, extension of time, alteration or addition to the term of the Agreement, or to the Work performed thereunder, or the Plans, Specifications, or drawings accompanying the same, shall in anywise affect its obligation on this bond, and it does hereby waive notice of any such change, extension of time, alteration or addition to the terms of the Agreement, or to the work to be performed thereunder.

IN WITNESS WHEREOF, the said Principal and Surety have signed and sealed this instrument this _____ day of _____, 20___.

_____	_____
Principal	Surety
_____	_____
Printed Name	Printed Name
By: _____	By: _____
Title: _____	Title: _____
Address: _____	Address: _____
_____	_____

Resident Agent of Surety:

_____
Signature

_____
Printed Name

_____
Street Address

_____
City, State & Zip Code

PAYMENT BOND

THE STATE OF TEXAS §
§ KNOW ALL MEN BY THESE PRESENTS:
COUNTY OF WILLIAMSON §

That _____, of the City of _____, County of _____, and State of _____ as Principal, and _____ authorized under the laws of the State of Texas to act as Surety on Bonds for Principals, are held and firmly bound unto **THE CITY OF ROUND ROCK, (OWNER)**, and all subcontractors, workers, laborers, mechanics and suppliers as their interest may appear, all of whom shall have the right to sue upon this bond, in the penal sum of _____ Dollars ($ _____) for the payment whereof, well and truly be made the said Principal and Surety bind themselves and their heirs, administrators, executors, successors, and assigns, jointly and severally, by these presents:

WHEREAS, the Principal has entered into a certain written Agreement with the Owner, dated the _____ day of _____, 20___, to which Agreement is hereby referred to and made a part hereof as fully and to the same extent as if copied at length herein consisting of: Greenlawn Storm Drainage Improvements

_____

_____(Name of the Project)

NOW, THEREFORE, THE CONDITION OF THIS OBLIGATION IS SUCH, that if the said Principal shall well and truly pay all subcontractors, workers, laborers, mechanics, and suppliers, all monies to them owing by said Principals for subcontracts, work, labor, equipment, supplies and materials done and furnished for the construction of the improvements of said Agreement, then this obligation shall be and become null and void; otherwise to remain in full force and effect.

PROVIDED, HOWEVER, that this bond is executed pursuant to the provisions of Chapter 2253, Texas Government code, as amended, and all liabilities on this bond shall be determined in accordance with the provisions of said Chapter 2253 to the same extent as if it were copied at length herein.

PAYMENT BOND (continued)

Surety, for value received, stipulates and agrees that no change, extension of time, alteration or addition to the terms of the Agreement, or to the Work performed thereunder, or the plans, specifications or drawings accompanying the same shall in anywise affect it's obligation on this bond, and it does hereby waive notice of any such change, extension of time, alteration or addition to the terms of the contract, or to the work to be performed thereunder.

IN WITNESS WHEREOF, the said Principal and Surety have signed and sealed this Instrument this _____ day of _____, 20___.

_____
Principal

_____
Printed Name

By: _____
Title: _____
Address: _____
_____

_____
Surety

_____
Printed Name

By: _____
Title: _____
Address: _____
_____

Resident Agent of Surety:

_____
Signature

_____
Printed Name

_____
Street Address

_____

CERTIFICATE OF LIABILITY INSURANCE

Date:_____

PRODUCER:

_____

_____

_____

Phone: E-mail:

INSURED:

_____

_____

_____

Phone: E-mail:

TDI number required. Please refer to the Texas Dept of Insurance website: http://www.tdi.state.tx.us/

	COMPANIES AFFORDING COVERAGE	TDI
A		
B		
C		
D		

THIS IS TO CERTIFY THAT the Insured named above is insured by the Companies listed above with respect to the business operations hereinafter described, for the types of insurance and in accordance with the provisions of the standard policies used by the companies, and further hereinafter described. Exceptions to the policies are noted below.

CO LTR	TYPE OF INSURANCE	POLICY NUMBER	EFFECTIVE DATE	EXPIRATION DATE			LIMITS
	GENERAL LIABILITY				GENERAL AGGREGATE	$	
					PRODUCTS-COMP/OP AGG.	$	
					PERSONAL & ADV. INJURY	$	
					EACH OCCURRENCE	$	
					FIRE DAMAGE (Any one fire)	$	
					MED. EXPENSE (Any one person)	$	
	AUTOMOBILE LIABILITY				COMBINED SINGLE LIMIT	$	
					BODILY INJURY (Per person)	$	
					BODILY INJURY (Per accident)	$	
					PROPERTY DAMAGE	$	
	EXCESS LIABILITY				EACH OCCURRENCE	$	
					AGGREGATE	$	
	WORKERS' COMPENSATION AND EMPLOYERS' LIABILITY				STATUTORY LIMITS	$	
					EACH ACCIDENT	$	
					DISEASE - POLICY LIMIT	$	
					DISEASE - EACH EMPLOYEE	$	
	PROFESSIONAL LIABILITY						
	BUILDERS' RISK INSURANCE OR INSTALLATION INSURANCE						
	DESCRIPTION OF OPERATIONS/LOCATIONS/VEHICLES/SPECIAL ITEMS/EXCEPTIONS						

The City of Round Rock is named as additional insured with respect to all policies except 'Workers' Compensation and Employers' Liability' and 'Professional Liability'. Should any of the above described policies be cancelled or changed before the expiration date thereof, the issuing company will mail thirty (30) days written notice to the certificate holder named below.

CERTIFICATE HOLDER: City Manager
City of Round Rock
221 E. Main Street
Round Rock, Texas 78664

SIGNATURE OF AGENT LICENSED IN STATE OF TEXAS

_____

Typed Name: _____

License ID: _____

00700 GENERAL CONDITIONS

TABLE OF CONTENTS OF GENERAL CONDITIONS

Article Number & Title — *Page Number*

1. DEFINITIONS....2
2. PRELIMINARY MATTERS....5
3. CONTRACT DOCUMENTS: INTENT, AMENDING, REUSE....7
4. AVAILABILITY OF LANDS; SUBSURFACE AND PHYSICAL CONDITIONS; REFERENCE POINTS....8
5. BONDS AND INSURANCE....10
6. CONTRACTOR'S RESPONSIBILITIES....15
7. OTHER WORK....23
8. OWNER'S RESPONSIBILITIES....23
9. ENGINEER/ARCHITECT'S STATUS DURING CONSTRUCTION....24
10. CHANGES IN THE WORK....25
11. CHANGE OF CONTRACT AMOUNT....26
12. CHANGE OF CONTRACT TIMES....29
13. TESTS AND INSPECTIONS; AND CORRECTION OR REMOVAL OF DEFECTIVE WORK....30
14. PAYMENTS TO CONTRACTOR AND COMPLETION....32
15. SUSPENSION OF WORK AND TERMINATION....36
16. DISPUTE RESOLUTION....38
17 RIGHT TO AUDIT....39
18. MISCELLANEOUS....40

ARTICLE 1 - DEFINITIONS

Whenever used in these General Conditions or in the other Contract Documents the following terms have the meanings indicated which are applicable to both the singular and plural thereof:

1.1 Addenda - Written or graphic instruments issued prior to the receipt of Proposals or the opening of Bids that clarify, correct or change the proposal or bidding requirements or the Contract Documents.

1.2 Agreement - Prescribed form, referenced as Section 00500.

1.3 Alternative Dispute Resolution - The process by which a disputed Claim may be settled if the OWNER and the CONTRACTOR cannot reach an agreement between themselves, as an alternative to litigation.

1.4 Bid - Proposal of bidder on prescribed forms setting forth prices for performing the Work described in the Contract Documents.

1.5 Bid Documents - The advertisement or invitation for bids, instructions to bidders, the bid form, the Contract Documents and Addenda.

1.6 Calendar Day - Any day of the week; no days being excepted. Work on Saturdays, Sundays, and/or Legal Holidays shall only be conducted with prior express written consent of the OWNER.

1.7 Change Directive - A written directive to the CONTRACTOR, signed by the OWNER, ordering a change in the Work and stating a proposed basis for adjustment, if any, in the Contract Amount or Contract Time, or both. A Change Directive may be used in the absence of total agreement on the terms of a Change Order. A Change Directive does not change the Contract Amount or Contract Time, but is evidence that the parties expect that the change directed or documented by a Change Directive will be incorporated in a subsequently issued Change Order.

1.8 Change Orders - Written agreements entered into between the CONTRACTOR and the OWNER authorizing an addition, deletion, or revision to the Contract, issued on or after the Execution Date of the Agreement and within the Contract term.

1.9 Claim - A written demand seeking, as a matter of right, adjustment or interpretation of Contract terms, payment of money, extension of time or other relief with respect to the terms of the Contract.

1.10 Contract - The Contract represents the entire and integrated agreement between the OWNER and the CONTRACTOR for performance of the Work, as evidenced by the Contract Documents.

1.11 Contract Amount - The amount payable by the OWNER to the CONTRACTOR for completion of the Work in accordance with the Contract Documents.

1.12 Contract Documents – Invitation to Bid, Instructions to Bidders, General Conditions, Supplemental General Conditions, Special Conditions, Technical Specifications, Project Manual, Drawings, Addenda and Change Orders.

1.13 Contract Time - The number of days allowed for completion of the Work as defined by the Contract. When any period is referred to in days, it will be computed to exclude the first and include the last day of such period. A day of twenty-four (24) hours measured from midnight to the next midnight will constitute a day.

1.14 CONTRACTOR - The individual, firm, corporation, or other business entity with whom the OWNER has entered into the Contract.

1.15 Drawings - Those portions of the Contract Documents which are graphic representations of the scope, extent and character of the Work to be furnished and performed by the CONTRACTOR and which have been

approved by the OWNER. Drawings may include plans, elevations, sections, details, schedules and diagrams. Shop Drawings are not Drawings as so defined.

1.16 Engineer/Architect (E/A) - The OWNER's design professional identified as such in the Contract. The titles of "Architect/Engineer," "Architect" and "Engineer" used in the Contract Documents shall be read the same as Engineer/Architect (E/A). Nothing contained in the Contract Documents shall create any contractual or agency relationship between E/A and the CONTRACTOR.

1.17 Equal - The terms "equal" or "approved equal" shall have the same meaning.

1.18 Execution Date - Date of last signature of the parties to the Agreement.

1.19 Field Order - A written order issued by Owner's Representative which orders minor changes in the Work and which does not involve a change in the Contract Amount or the Contract Time.

1.20 Final Acceptance – The stage in the Contract process when, in the OWNER's opinion, Final Completion of the Work has been attained and a Certificate of Acceptance approved by the OWNER is issued.

1.21 Final Completion - The stage in the progress of the Work when, in the OWNER's opinion, the entire Work has been completed, the CONTRACTOR's obligations under the Contract Documents have been fulfilled, and the OWNER is processing or has made final payment to the CONTRACTOR, as evidenced by a Certificate of Acceptance approved by the OWNER.

1.22 Inspector - The authorized representative of any regulatory agency that has jurisdiction over any portion of the Work.

1.23 Legal Holidays

1.23.1 The following are recognized by the OWNER:

Holiday	*Date Observed*
New Year's Day	January 1
Martin Luther King, Jr.'s Birthday	Third Monday in January
President's Day	Third Monday in February
Memorial Day	Last Monday in May
Independence Day	July 4
Labor Day	First Monday in September
Veteran's Day	November 11
Thanksgiving Day	Fourth Thursday in November
Friday after Thanksgiving	Friday after Thanksgiving

Christmas Eve	December 24
Christmas Day	December 25

1.23.2 If a Legal Holiday falls on Saturday, it will be observed on the preceding Friday. If a Legal Holiday falls on Sunday, it will be observed on the following Monday.

1.23.3 If Christmas Eve falls on a Saturday or a Sunday, the preceding Friday is observed as the Christmas Eve holiday.

1.23.4 If Christmas Day falls on a Saturday or a Sunday, the following Monday is observed as the Christmas Day holiday.

1.24 Milestones - A significant event specified in the Contract Documents relating to an intermediate completion date or time prior to Substantial Completion of all the Work.

1.25 Notice to Proceed - A Written Notice given by the OWNER to the CONTRACTOR fixing the date on which the Contract Times will commence to run and on which the CONTRACTOR shall start to perform the CONTRACTOR's obligations under the Contract Documents.

1.26 OWNER – The City of Round Rock, Texas, a municipal corporation, home-rule city and political subdivision organized and existing under the laws of the State of Texas, acting through the City Manager or his/her designee, officers, agents or employees to administer design and construction of the Project.

1.27 Owner's Representative - The designated representative of the OWNER.

1.28 Partial Occupancy or Use - Use by the OWNER of a partially completed part of the Work for the purpose for which it is intended (or a related purpose) prior to Substantial Completion of all the Work.

1.29 Project - The total construction of which the Work to be provided under the Contract Documents may be the whole, or a part, as indicated elsewhere in the Contract Documents.

1.30 Project Manual - That portion of the Contract Documents which may include the following: introductory information; bidding requirements, Contract forms and General and Supplemental General Conditions; General Requirements; Specifications; Drawings; Project Safety Manual; and Addenda.

1.31 Proposal – Proposal of Offeror, under Local Government Code §271.113 providing for alternative project delivery methods, on prescribed forms setting forth prices for performing the Work described in the Contract Documents.

1.32 Proposal Documents – The advertisement or invitation for Proposals, Instruction to Offerors, the Proposal form, the Contract Documents and Addenda.

1.33 Resident Project Representative - The authorized representative of E/A who may be assigned to the site or any part thereof.

1.34 Shop Drawings - All drawings, diagrams, illustrations, schedules and other data or information which are specifically prepared or assembled by or for the CONTRACTOR and submitted by the CONTRACTOR as required by the Contract Documents.

1.35 Specifications - Those portions of the Contract Documents consisting of written technical descriptions as applied to the Work, which set forth to the CONTRACTOR, in detail, the requirements which must be met by all materials, equipment, construction systems, standards, workmanship, equipment and services in order to render a completed and useful project.

1.36 Substantial Completion - The stage in the progress of the Work when the Work, or designated portions thereof, may still require minor modifications or adjustments but, in the OWNER's opinion, the Work has progressed to the point such that all parts of the Work under consideration are fully operational, as evidenced by a Certificate of Substantial Completion approved by the OWNER.

1.37 Subcontractor - An individual, firm, or corporation having a direct contract with the CONTRACTOR for the performance of a part of the Work.

1.38 Sub-subcontractor - A person or entity who has a direct or indirect contract with a Subcontractor to perform a portion of the Work.

1.39 Superintendent - The representative of the CONTRACTOR authorized in writing to receive and fulfill instructions from Owner's Representative, and who shall supervise and direct construction of the Work.

1.40 Supplemental General Conditions - The part of the Contract Documents which either amends or supplements the General Conditions. All General Conditions which are not so amended or so supplemented shall be considered as remaining in full force and effect.

1.41 Supplier - An individual or entity having a direct contract with the CONTRACTOR or with any Subcontractor to furnish materials or equipment to be incorporated in the Work by the CONTRACTOR or any Subcontractor.

1.42 Time Extension Request - An approved request for time extension on a form acceptable to the OWNER.

1.43 Work - The entire completed construction, or the various separately identifiable parts thereof, required to be furnished under the Contract Documents.

1.44 Working Day - Any day of the week, not including Saturdays, Sundays, or Legal Holidays, in which conditions not under the CONTRACTOR's control will permit work for at least seven (7) hours of the Working Times. Upon authorization by the Owner's Representative, work on Saturdays, Sundays and/or Legal Holidays may be allowed and in that event a Working Day will be counted for each such day.

1.45 Working Times – Times of day(s) during which work may be performed. Unless authorized by Owner's Representative, all Work shall be performed between 7:00 a.m. and 6:00 p.m. on weekdays and, if previously authorized as provided for in paragraph 1.44 or paragraph 1.6 herein, as applicable, between 9:00 a.m. and 6:00 p.m. on Saturdays, Sundays or Legal Holidays. When the CONTRACTOR has been authorized to perform Work during hours outside Working Times, such hours shall be considered time worked on Working Day contracts. Notwithstanding the preceding, emergency work may be done without prior permission only as provided in paragraph 6.11.5 herein.

1.46 Written Notice - Written communication between the OWNER and the CONTRACTOR. Written Notice shall be deemed to have been duly served if delivered in person to Owner's Representative or to the CONTRACTOR's duly authorized representative, or if such Written Notice is delivered to or sent by registered or certified mail to the attention of Owner's Representative or to the CONTRACTOR's duly authorized representative at the last business address known to the party giving notice.

ARTICLE 2 - PRELIMINARY MATTERS

2.1 Delivery of Agreement, Bonds, Insurance, and Other Documentation:

Within ten (10) Calendar Days after written notification of award of Contract, the CONTRACTOR shall deliver to the OWNER signed Agreement, Bond(s), Insurance Certificate(s) and other documentation required for execution of the Contract.

2.2 Copies of Documents:

The OWNER shall furnish to the CONTRACTOR two (2) copies of the Contract Documents unless otherwise specified.

2.3 Commencement of Contract Times; Notice to Proceed:

The Contract Time(s) will begin to run on the day indicated in the Notice to Proceed. Notice to Proceed will be given at any time within sixty (60) Calendar Days after the Execution Date of the Agreement, unless extended by written agreement of the parties.

2.4 Before Starting Construction:

2.4.1 No Work shall be done at the site prior to the preconstruction conference without the OWNER's approval. Before undertaking each part of the Work, the CONTRACTOR shall carefully study and compare the Contract Documents and check and verify pertinent figures shown thereon and all applicable field measurements. The CONTRACTOR shall promptly report in writing to Owner's Representative any conflict, error, ambiguity or discrepancy which the CONTRACTOR may discover and shall obtain a written interpretation or clarification from Owner's Representative before proceeding with any Work affected thereby. The CONTRACTOR shall be liable to the OWNER for failure to report any conflict, error, ambiguity or discrepancy in the Contract Documents of which the CONTRACTOR knew or reasonably should have known.

2.4.2 The CONTRACTOR shall submit the following to Owner's Representative for review and approval no later than the preconstruction conference:

.1 a preliminary progress schedule indicating the times (number of days or dates) for starting and completing the various stages of the Work, including any Milestones specified in the Contract Documents, identifying when all Subcontractors will be utilized, and taking into consideration any limitations on Working Hours;

.2 a preliminary schedule of Shop Drawing and sample submittals;

.3 a preliminary schedule of values for all of the Work, subdivided into component parts in sufficient detail to serve as the basis for progress payments during construction. Such prices will include an appropriate amount of overhead and profit applicable to each item of Work;

.4 a letter designating CONTRACTOR's Superintendent;

.5 a letter from the CONTRACTOR and Subcontractor(s) listing any salaried specialists;

.6 if applicable, a letter designating the "Competent Person(s)" on general safety and trench safety measures;

.7 if applicable, a trench safety system plan;

.8 if applicable, a plan illustrating proposed locations of temporary facilities;

.9 if applicable, a traffic control plan;

.10 a completed Non-Use of Asbestos Affidavit (Prior to Construction); and

.11 if applicable, a letter designating the Texas Registered Professional Land Surveyor for layout of the Work.

2.5 Preconstruction Conference:

Prior to commencement of Work at the site, a preconstruction conference attended by the CONTRACTOR, Owner's Representative and others will be held.

2.6 Initially Acceptable Schedules:

Unless otherwise provided in the Contract Documents, the CONTRACTOR shall obtain approval of Owner's Representative on final versions of the schedules submitted in accordance with paragraph 2.4.2 before the first progress payment will be made to the CONTRACTOR. The progress schedule must provide for an orderly progression of the Work to completion within any specified Milestones and Contract Times. Acceptance of the schedule by Owner's Representative will neither impose on Owner's Representative responsibility for the sequencing, scheduling or progress of the Work nor interfere with or relieve the CONTRACTOR from the CONTRACTOR's full responsibility therefor. The CONTRACTOR's schedule of Shop Drawings and sample submissions must provide an arrangement agreeable to the parties for reviewing and processing the required submittals.

ARTICLE 3 - CONTRACT DOCUMENTS: INTENT, AMENDING, REUSE

3.1 Intent:

3.1.1 The intent of the Contract Documents is to include all information necessary for the proper execution and completion of the Work by the CONTRACTOR. The Contract Documents are complementary, and what is required by one shall be as binding as if required by all. In cases of disagreement, the following order of precedence shall govern (top item receiving priority of interpretation):

Signed Agreement
Addenda to the Contract Documents
Special Conditions
Supplemental General Conditions
General Conditions
Other Bidding Requirements and Contract Forms
Special Provisions to the Standard Technical Specifications
Special Specifications
Standard Technical Specifications
Drawings (figured dimensions shall govern over scaled dimensions)
Project Safety manual, if applicable

3.1.2 Unless otherwise stated in the Contract Documents, words which have well-known technical or construction industry meanings are used in the Contract Documents in accordance with such recognized meanings.

3.2 Reporting and Resolving Discrepancies:

If, during the performance of the Work, the CONTRACTOR discovers any conflict, error, ambiguity or discrepancy within the Contract Documents or between the Contract Documents and any provisions of any such law or regulation applicable to the performance of the Work or of any such standard, specification, manual or code or instructions of any Supplier, the CONTRACTOR shall immediately report it to Owner's Representative in writing, and the CONTRACTOR shall not proceed with the Work affected thereby until an amendment or supplement to the Contract Documents has been issued by one of the methods indicated in paragraph 3.3.1 or paragraph 3.3.2. The CONTRACTOR shall be liable to the OWNER for failure to report any such conflict, error, ambiguity or discrepancy of which the CONTRACTOR knew or reasonably should have known.

3.3 Amending and Supplementing Contract Documents:

3.3.1 The Contract Documents may be amended to provide for additions, deletions and revisions in the Work or to modify the terms and conditions thereof in one or more of the following ways:

.1 Change Order.

.2 Change Directive.

.3 Time Extension Request.

3.3.2 In addition, the requirements of the Contract Documents may be supplemented, and minor variations and deviations in the Work may be authorized, in one or more of the following ways:

.1 Field Order.

.2 Review of a Shop Drawing or sample.

.3 Written interpretation or clarification.

3.4 Reuse of Documents Prohibited:

The CONTRACTOR and any Subcontractor or Supplier or other person or organization performing or furnishing any of the Work under a direct or indirect contract with the OWNER: (i) shall not have or acquire any title to or ownership rights in any of the Drawings, Specifications or other documents (or copies of any thereof) prepared by or bearing the seal of E/A or E/A's consultants, and (ii) shall not reuse any of such Drawings, Specifications, other documents or copies on extensions of the Project or any other project without written consent of the OWNER and E/A.

ARTICLE 4 - AVAILABILITY OF LANDS; SUBSURFACE AND PHYSICAL CONDITIONS; REFERENCE POINTS

4.1 Availability of Lands:

The OWNER shall furnish, as indicated in the Contract Documents, all required rights to use the lands upon which the Work is to be performed, rights-of-way and easements for access thereto, and such other lands which are designated for the use of the CONTRACTOR. The OWNER shall identify any encumbrances or restrictions not of general application but specifically related to use of lands so furnished with which the CONTRACTOR will have to comply in performing the Work. Easements for permanent structures or permanent changes in existing facilities will be obtained and paid for by the OWNER, unless otherwise provided in the Contract Documents. If the OWNER fails to furnish these lands, rights-of-way or easements in a timely manner, the CONTRACTOR may make a Claim for adjustments in the Contract Times. The CONTRACTOR shall provide for all additional lands and access thereto that may be required for temporary construction facilities or storage of materials and equipment.

4.2 Subsurface and Physical Conditions:

4.2.1 The CONTRACTOR hereby covenants that it has examined the site of the proposed Work and is familiar with all of the conditions surrounding construction of the Project, having conducted all inquiries, tests and investigations deemed necessary and proper.

4.2.2 If conditions are encountered at the site which are (1) subsurface or otherwise concealed physical conditions that differ materially from those indicated in the Contract Documents or (2) unknown physical conditions of an unusual nature, that differ materially from those normally encountered in the type of work being performed under this Contract, then notice by the observing party shall be given to the other party promptly before conditions are disturbed and in no event later than seven (7) calendar days after first observance of the conditions. Owner's Representative will promptly investigate such conditions with E/A and, if they differ materially and cause an increase or decrease in the CONTRACTOR's cost of, or time required for, performance of any part of the Work, will

recommend an equitable adjustment in the Contract Amount or Contract Time, or both. If Owner's Representative determines that the conditions at the site are not materially different from those indicated in the Contract Documents and that no change in the terms of the Contract is justified, the CONTRACTOR shall be notified in writing, stating the reasons. Any disputes arising from Owner's Representative's determination shall be resolved in accordance with Article 16.

4.2.3 Notwithstanding any other provision of this Contract, the CONTRACTOR shall be solely responsible for the location and protection of any and all public lines and utility customer service lines in the Work area. For the purposes of this section, "public lines" means the utility distribution and supply system within public rights-of-way or easements, and "utility customer service lines" (service) means any utility line connecting a utility customer to the utility distribution system. Generally, existing service connections within right-of-way or easements are not shown on the Drawings. The CONTRACTOR shall notify the OWNER and "One Call" and exercise due care to locate and to mark, uncover or otherwise protect all such lines in the construction zone and any of the CONTRACTOR's work or storage areas. The CONTRACTOR's obligation hereunder shall be primary and nondelegable. The CONTRACTOR shall indemnify or reimburse such expenses or costs (including fines that may be levied against the OWNER) that may result from unauthorized or accidental damage to all public lines and utility customer service lines in the Work area. The OWNER reserves the right to repair such damage the CONTRACTOR may cause, at the CONTRACTOR's expense.

4.2.4 The CONTRACTOR shall take reasonable precaution to avoid disturbing primitive records and antiquities of archaeological, paleontological or historical significance. No objects of this nature shall be disturbed without written permission of the OWNER and the Texas Department of Antiquities Protection. When such objects are uncovered unexpectedly, the CONTRACTOR shall stop all Work in close proximity and notify Owner's Representative and the Texas Department of Antiquities Protection of their presence and shall not disturb them until written permission and permit to do so is granted. All primitive rights and antiquities uncovered on the OWNER's property shall remain property of the State of Texas, the Texas Department of Antiquities Protection conforming to the Texas Natural Resources Code. If it is determined by the OWNER, in consultation with the Texas Department of Antiquities Protection, that exploration or excavation of primitive records or antiquities on Project site is necessary to avoid loss, the CONTRACTOR shall cooperate in salvage work attendant to preservation. If the Work stoppage or salvage work causes an increase in the CONTRACTOR's cost of, or time required for, performance of the Work, the Contract Amount and/or Contract Time may be equitably adjusted.

4.3 Reference Points:

Unless otherwise specified, the OWNER will furnish all reference points, benchmarks, survey monuments, and control points which, in the OWNER's opinion, are suitable for laying out the Work. Such benchmarks and reference points will be placed at intervals not to exceed 1,500 feet.

All reference points, benchmarks, survey monuments and control points shall be carefully preserved by the CONTRACTOR by use of flags, laths or other appropriate measures and, in case of destruction or removal by the CONTRACTOR or its employees, such reference points, benchmarks, survey monuments, and control points shall be replaced by a Registered Professional Land Surveyor at the CONTRACTOR's expense. When reference points, benchmarks, survey monuments, or control points are in conflict with the Work, then reestablishment will be the OWNER's responsibility during or upon completion of the Work.

4.4 Hazardous Materials:

4.4.1 The OWNER shall be responsible for any hazardous material uncovered or revealed at the site which was not shown, indicated or identified in the Contract Documents to be within the scope of the Work and which may present a substantial danger to persons or property exposed thereto in connection with the Work at the site. The CONTRACTOR shall immediately notify Owner's Representative of any suspected hazardous materials encountered before or during performance of the Work and shall take all necessary precautions to avoid further disturbance of the materials.

4.4.2 The CONTRACTOR shall be responsible for any hazardous materials brought to the site by the CONTRACTOR, Subcontractor, Suppliers or anyone else for whom the CONTRACTOR is responsible.

4.4.3 No asbestos-containing materials shall be incorporated into the Work or brought on the Project site without prior approval of the OWNER.

ARTICLE 5 - BONDS AND INSURANCE

5.1 Surety and Insurance Companies:

All bonds and insurance required by the Contract Documents shall be obtained from solvent surety or insurance companies that are duly licensed by the State of Texas and authorized to issue bonds or insurance policies for the limits and coverages required by the Contract Documents. The bonds shall be in a form acceptable to the OWNER and shall be issued by a surety which complies with the requirements of Art. 7.19-1, Texas Insurance Code (1997) and which is otherwise acceptable to the OWNER.

OWNER may require the surety to obtain reinsurance for any portion of the risk that exceeds 10% of the surety's capital and surplus. For bonds exceeding $100,000, the surety must also hold a certificate of authority from the U.S. Secretary of the Treasury or have obtained reinsurance from a reinsurer that is authorized as a reinsurer in Texas and holds a certificate of authority from the U.S. Secretary of the Treasury.

5.2 Workers' Compensation Insurance Coverage:

5.2.1 Definitions:

.1 Certificate of coverage ("certificate") - A copy of a certificate of insurance, a certificate of authority to self-insure issued by the commission, or a coverage agreement showing statutory workers' compensation insurance coverage for the person's or entity's employees providing services on the Project, for the duration of the Project.

.2 Duration of the Project - includes the time from the beginning of the Work on the Project until the CONTRACTOR's/ person's Work on the Project has been completed and accepted by the OWNER.

.3 Persons providing services on the Project ("subcontractor" herein) - includes all persons or entities performing all or part of the services the CONTRACTOR has undertaken to perform on the Project, regardless of whether that person contracted directly with the CONTRACTOR and regardless of whether that person has employees. This includes, by way of illustration and not of limitation, independent contractors, Subcontractors, leasing companies, motor carriers, owner-operators, employees of any such entity, or employees of any entity which furnishes persons to provide services on the Project. "Services" include, without limitation, providing, hauling, or delivering equipment or materials, or providing labor, transportation, or other service related to a project. "Services" does not include activities unrelated to the Project, such as food/beverage vendors, office supply deliveries, and delivery of portable toilets.

5.2.2 The CONTRACTOR shall provide coverage, based on proper reporting of classification codes and payroll amounts and filing of any coverage agreements, which meets the statutory requirements of Texas Labor Code, Section 401.011(44) for all employees of the CONTRACTOR providing services on the Project, for the duration of the Project.

5.2.3 The OWNER will not execute the Contract prior to the CONTRACTOR providing all required certificates of coverage.

5.2.4 If the coverage period shown on the CONTRACTOR's current certificate of coverage ends during the duration of the Project, the CONTRACTOR must, prior to the end of the coverage period, file a new certificate of coverage with the OWNER showing that coverage has been extended.

5.2.5 The CONTRACTOR shall obtain from each person providing services on the Project, and provide to the OWNER:

.1 a certificate of coverage, prior to that person beginning Work on the Project, so the OWNER will have on file certificates of coverage showing coverage for all persons providing services on the Project; and

.2 no later than seven (7) days after receipt by the CONTRACTOR, a new certificate of coverage showing extension of coverage, if the coverage period shown on the current certificate of coverage ends during the duration of the Project.

5.2.6 The CONTRACTOR shall retain all required certificates of coverage for the duration of the Project and for one (1) year thereafter.

5.2.7 The CONTRACTOR shall notify the OWNER in writing by certified mail or personal delivery within ten (10) days after the CONTRACTOR knew or should have known of any change that materially affects the provision of coverage of any person providing services on the Project.

5.2.8 The CONTRACTOR shall post at its office or on each Project site a notice, in the text, form and manner prescribed by the Texas Workers' Compensation Commission, informing all persons providing services on the Project that they are required to be covered, and stating how a person may verify coverage and report lack of coverage.

5.2.9 The CONTRACTOR shall contractually require each person with whom it contracts to provide services on a Project to:

.1 provide coverage, based on proper reporting of classification codes and payroll amounts and filing of any coverage agreements, which meets the statutory requirements of Texas Labor Code, Section 401.011(44) for all of its employees providing services on the Project, for the duration of the Project;

.2 provide to the CONTRACTOR, prior to that person beginning Work on the Project, a certificate of coverage showing that coverage is being provided for all employees of the person providing services on the Project, for the duration of the Project;

.3 provide the CONTRACTOR, prior to the end of the coverage period, a new certificate of coverage showing extension of coverage, if the coverage period shown on the current certificate of coverage ends during the duration of the Project;

.4 obtain from each other person with whom it contracts, and provide to the CONTRACTOR:

a) a certificate of coverage, prior to the other person beginning Work on the Project; and

b) a new certificate of coverage showing extension of coverage, prior to the end of the coverage period, if the coverage period shown on the current certificate of coverage ends during the duration of the Project;

.5 retain all required certificates of coverage on file for the duration of the Project and for one (1) year thereafter;

.6 notify the OWNER in writing by certified mail or personal delivery within ten (10) days after the person knew or should have known of any change that materially affects the provision of coverage of any person providing services on the Project; and

.7 contractually require each person with whom it contracts, to perform as required by paragraphs 5.2.9.1 - 5.2.9.7, with the certificates of coverage to be provided to the person for whom they are providing services.

5.2.10 By signing this Contract or providing or causing to be provided a certificate of coverage, the CONTRACTOR is representing to the OWNER that all employees of the CONTRACTOR who will provide services

on the Project will be covered by workers' compensation coverage for the duration of the Project, that the coverage will be based on proper reporting of classification codes and payroll amounts, and that all coverage agreements will be filed with the appropriate insurance carrier or, in the case of a self-insured, with the commission's Division of Self-Insurance Regulation. Providing false or misleading information may subject the CONTRACTOR to administrative penalties, criminal penalties, civil penalties, or other civil actions.

5.2.11 The CONTRACTOR's failure to comply with any of these provisions is a breach of Contract by the CONTRACTOR which entitles the OWNER to declare the Contract void if the CONTRACTOR does not remedy the breach within ten (10) days after receipt of notice of breach from the OWNER.

5.3 Contractor Insurance Requirements:

For specific bond requirements and additional insurance requirements, refer to the Supplemental General Conditions.

5.3.1.1 General Requirements:

.1 CONTRACTOR shall carry insurance in the types and amounts indicated below for the duration of the Contract, which shall include items owned by OWNER in the care, custody and control of CONTRACTOR prior to and during construction and warranty period.

.2 CONTRACTOR must complete and forward the required Certificates of Insurance to OWNER before the Contract is executed as verification of coverage required below. CONTRACTOR shall not commence Work until the required insurance is obtained and until such insurance has been reviewed by OWNER. Approval of insurance by OWNER shall not relieve or decrease the liability of CONTRACTOR hereunder and shall not be construed to be a limitation of liability on the part of CONTRACTOR. CONTRACTOR must also complete and forward the required Certificates of Insurance to OWNER whenever a previously identified policy period has expired as verification of continuing coverage.

.3 CONTRACTOR's insurance coverage is to be written by companies licensed to do business in the State of Texas at the time the policies are issued and shall be written by companies with A.M. Best ratings of B+VII or better, except for hazardous material insurance which shall be written by companies with A.M. Best ratings of A- or better.

.4 All endorsements naming the OWNER as additional insured, waivers, and notices of cancellation endorsements as well as the Certificate of Insurance shall indicate: City of Round Rock, 221 E. Main St., Round Rock, Texas 78664.

.5 The "other" insurance clause shall not apply to the OWNER where the OWNER is an additional insured shown on any policy. It is intended that policies required in the Contract, covering both OWNER and CONTRACTOR, shall be considered primary coverage as applicable.

.6 If insurance policies are not written for amounts specified below, CONTRACTOR shall carry Umbrella or Excess Liability Insurance for any differences in amounts specified. If Excess Liability Insurance is provided, it shall follow the form of the primary coverage.

.7 OWNER shall be entitled, upon request and without expense, to receive certified copies of policies and endorsements thereto and may make any reasonable requests for deletion or revision or modification of particular policy terms, conditions, limitations, or exclusions except where policy provisions are established by law or regulations binding upon either of the parties hereto or the underwriter on any such policies.

.8 OWNER reserves the right to review the insurance requirements set forth during the effective period of this Contract and to make reasonable adjustments to insurance coverage, limits, and exclusions when deemed necessary and prudent by OWNER based upon changes in statutory law,

court decisions, the claims history of the industry or financial condition of the insurance company as well as CONTRACTOR.

.9 CONTRACTOR shall not cause any insurance to be canceled nor permit any insurance to lapse during the term of the Contract or as required in the Contract.

.10 CONTRACTOR shall be responsible for premiums, deductibles and self-insured retentions, if any, stated in policies. All deductibles or self-insured retentions shall be disclosed on the Certificate of Insurance.

.11 CONTRACTOR shall provide OWNER thirty (30) days written notice of erosion of the aggregate limits below occurrence limits for all applicable coverages indicted within the Contract.

.12 If OWNER-owned property is being transported or stored off-site by CONTRACTOR, then the appropriate property policy will be endorsed for transit and storage in an amount sufficient to protect OWNER's property.

.13 The insurance coverages required under this contract are required minimums and are not intended to limit the responsibility or liability of CONTRACTOR.

5.3.1.2 Business Automobile Liability Insurance.

Provide coverage for all owned, non-owned and hired vehicles. The policy shall contain the following endorsements in favor of OWNER:

a) Waiver of Subrogation endorsement TE 2046A;

b) 30 day Notice of Cancellation endorsement TE 0202A; and

c) Additional Insured endorsement TE 9901 B.

Provide coverage in the following types and amounts:

.1 A minimum combined single limit of $500,000 per occurrence for bodily injury and property damage. Alternate acceptable limits are $250,000 bodily injury per person, $500,000 bodily injury per occurrence and at least $100,000 property damage liability each accident.

5.3.1.3 Workers' Compensation and Employers' Liability Insurance:

Coverage shall be consistent with statutory benefits outlined in the Texas Workers' Compensation Act (Section 401). CONTRACTOR shall assure compliance with this Statute by submitting two (2) copies of a standard certificate of coverage (e.g. ACCORD form) to Owner's Representative for every person providing services on the Project as acceptable proof of coverage. The required Certificate of Insurance must be presented as evidence of coverage for CONTRACTOR. Workers' Compensation Insurance coverage written by the Texas Workers Compensation Fund is acceptable to OWNER. CONTRACTOR's policy shall apply to the State of Texas and include these endorsements in favor of OWNER:

a) Waiver of Subrogation, form WC 420304; and

b) 30 day Notice of Cancellation, form WC 420601.

The minimum policy limits for Employers' Liability Insurance coverage shall be as follows:

.1 $100,000 bodily injury per accident, $500,000 bodily injury by disease policy limit and $100,000 bodily injury by disease each employee.

5.3.1.4 Commercial General Liability Insurance.

The Policy shall contain the following provisions:

a) Blanket contractual liability coverage for liability assumed under the Contract and all contracts relative to this Project.

b) Completed Operations/Products Liability for the duration of the warranty period.

c) Explosion, Collapse and Underground (X, C & U) coverage.

d) Independent Contractors coverage.

e) Aggregate limits of insurance per project, endorsement CG 2503.

f) OWNER listed as an additional insured, endorsement CG 2010.

g) 30 day notice of cancellation in favor of OWNER, endorsement CG 0205.

h) Waiver of Transfer of Recovery Against Others in favor of OWNER, endorsement CG 2404.

Provide coverages A&B with minimum limits as follows:

.1 A combined bodily injury and property damage limit of $500,000 per occurrence.

5.3.1.5 Builders' Risk Insurance.

CONTRACTOR shall maintain Builders' Risk Insurance or Installation Insurance on an all risk physical loss form in the Contract Amount. Coverage shall continue until the Work is accepted by OWNER. OWNER shall be a loss payee on the policy. If off site storage is permitted, coverage shall include transit and storage in an amount sufficient to protect property being transported or stored.

5.4 Bonds:

5.4.1 General.

.1 Bonds, when required, shall be executed on forms furnished by or acceptable to OWNER. All bonds signed by an agent must be accompanied by a certified copy of such agent's authority to act.

.2 If the surety on any bond furnished by CONTRACTOR is declared bankrupt or becomes insolvent or its right to do business is terminated in the State of Texas or it ceases to meet the requirements of the preceding paragraph, CONTRACTOR shall within ten (10) days thereafter substitute another bond and surety, both of which must be acceptable to OWNER.

.3 When Performance Bonds and/or Payment Bonds are required, each shall be issued in an amount of one hundred percent (100%) of the Contract Amount as security for the faithful performance and/or payment of all CONTRACTOR's obligations under the Contract Documents. Performance Bonds and Payment Bonds shall be issued by a solvent surety company authorized to do business in the State of Texas, and shall meet any other requirements established by law or by OWNER pursuant to applicable law. Any surety duly authorized to do business in Texas may write Performance and Payment Bonds on a project without reinsurance to the limit of 10 percent of its capital and surplus. Such a surety must reinsure any obligations over 10 percent.

5.4.2 Performance Bond.

.1 If the Contract Amount exceeds $100,000, CONTRACTOR shall furnish OWNER with a Performance Bond in the form set out by OWNER.

.2 If the Contract Amount exceeds $25,000 but is less than or equal to $100,000, CONTRACTOR shall furnish OWNER with a Performance Bond in the form set out by OWNER, unless the original Contract Time is 60 Calendar Days/40 Working Days or less, in which case CONTRACTOR can agree to the following terms and conditions for payment in lieu of providing a Performance Bond: no money will be paid to CONTRACTOR until completion and acceptance of the Work by OWNER; CONTRACTOR shall be entitled to receive 95% of the Contract Amount following Final Completion, and the remaining 5% of the Contract Amount following the one year warranty period.

.3 If the Contract Amount is less than or equal to $25,000, CONTRACTOR will not be required to furnish a Performance Bond; provided that no money will be paid to CONTRACTOR until completion and acceptance of the Work by OWNER under the following terms and conditions: CONTRACTOR shall be entitled to receive 95% of the Contract Amount following Final Completion, and the remaining 5% of the Contract Amount following the one year warranty period.

.4 If a Performance Bond is required to be furnished, it shall extend for the one year warranty period.

5.4.3 Payment Bond.

.1 If the Contract Amount exceeds $25,000, CONTRACTOR shall furnish OWNER with a Payment Bond in the form set out by OWNER.

.2 If the Contract Amount is less than or equal to $25,000, CONTRACTOR will not be required to furnish a Payment Bond; provided that no money will be paid to CONTRACTOR until completion and acceptance of the Work by OWNER under the terms and conditions specified in paragraph 5.4.2.3.

ARTICLE 6 - CONTRACTOR'S RESPONSIBILITIES

6.1 Supervision and Superintendence:

6.1.1 The CONTRACTOR shall supervise, inspect and direct the Work competently and efficiently, devoting such attention thereto and applying such skills and expertise as may be necessary to perform the Work in accordance with the Contract Documents. Unless otherwise directed by the OWNER in the Contract Documents, the CONTRACTOR shall be solely responsible for the means, methods, techniques, sequences and procedures of construction. The CONTRACTOR shall be responsible to see that the completed Work complies accurately with the Contract Documents.

6.1.2 The CONTRACTOR shall have an English-speaking, competent Superintendent on the Work at all times that work is in progress. Upon request of Owner's Representative, the CONTRACTOR shall present the resume of the proposed Superintendent to Owner's Representative showing evidence of experience and successful superintendence and direction of work of a similar scale and complexity. If, in the opinion of Owner's Representative, the proposed Superintendent does not indicate sufficient experience in line with the Work, he/she will not be allowed to be the designated Superintendent for the Work. The Superintendent shall not be replaced without Written Notice to Owner's Representative. If the CONTRACTOR deems it necessary to replace the Superintendent, the CONTRACTOR shall provide the necessary information for approval, as stated above, on the proposed new Superintendent. A qualified substitute Superintendent may be designated in the event that the designated Superintendent is temporarily away from the Work, but not to exceed a time limit acceptable to Owner's Representative. The CONTRACTOR shall replace the Superintendent upon the OWNER's request in the event the Superintendent is unable to perform to the OWNER's satisfaction. The Superintendent will be the CONTRACTOR's representative on the Work and shall have the authority to act on behalf of the CONTRACTOR. All communications given to the Superintendent shall be as binding as if given to the CONTRACTOR. Either the CONTRACTOR or the

Superintendent shall provide an emergency and home telephone number at which one or the other may be reached if necessary when work is not in progress.

6.2 Labor, Materials and Equipment:

6.2.1 The CONTRACTOR agrees to employ only orderly and competent workers, skillful in performance of the type of Work required under this Contract. The CONTRACTOR, Subcontractors, Sub-subcontractors, and their employees may not use or possess any firearms, alcoholic or other intoxicating beverages, illegal drugs or controlled substances while on the job or on the OWNER's property, nor may such workers be intoxicated, or under the influence of alcohol or drugs, on the job. If the OWNER or Owner's Representative notifies the CONTRACTOR that any worker is incompetent, disorderly or disobedient, has knowingly or repeatedly violated safety regulations, has possessed any firearms, or has possessed or was under the influence of alcohol or drugs on the job, the CONTRACTOR shall immediately remove such worker from performing Contract Work, and may not employ such worker again on Contract Work without the OWNER's prior written consent. The CONTRACTOR shall at all times maintain good discipline and order on or off the site in all matters pertaining to the Project. The CONTRACTOR shall pay workers no less than the wage rates established in Section 00900, and maintain weekly payroll reports as evidence thereof.

6.2.2 Unless otherwise specified, the CONTRACTOR shall provide and pay for all materials, equipment, labor, transportation, construction equipment and machinery, tools, appliances, fuel, power, light, heat, telephone, water, sanitary facilities, temporary facilities and all other facilities and incidentals necessary for the furnishing, performance, re-testing of defective work, start-up and completion of the Work.

6.2.3 All materials and equipment shall be of good quality and new (including new products made of recycled materials), except as otherwise provided in the Contract Documents. If required by Owner's Representative, the CONTRACTOR shall furnish satisfactory evidence (reports of required tests, manufacturer's certificates of compliance with material requirements, mill reports, etc.) as to the kind, quantity and quality of materials and equipment. All materials and equipment shall be applied, installed, connected, erected, used, cleaned and conditioned in accordance with instructions of the applicable Supplier, except as otherwise provided in the Contract Documents.

6.2.4 Substitutes and "Approved Equal" Items:

6.2.4.1 Whenever an item of material or equipment is specified or described in the Contract Documents by using the name of a proprietary item or the name of a particular Supplier, the specification or description is intended to establish the type, function and quality required. Unless the specification or description contains words reading that no like, equivalent or "approved equal" item or no substitution is permitted, other items of material or equipment of other Suppliers may be submitted to Owner's Representative under the following circumstances:

.1 "Approved Equal": If, in the OWNER's sole discretion, an item of material or an item of equipment proposed by the CONTRACTOR is functionally equal to that named and sufficiently similar so that no change in related Work will be required, it may be considered by the OWNER as an "approved equal" item, in which case review of the proposed item may, in the OWNER's sole discretion, be accomplished without compliance with some or all of the requirements for evaluation of proposed substitute items. The CONTRACTOR shall provide the OWNER with the documentation required for the OWNER to make its determination.

.2 Substitute Items: If, in the OWNER's sole discretion, an item of material or an item of equipment proposed by the CONTRACTOR does not qualify as an "approved equal" item under paragraph 6.2.4.1.1, then it will be considered a proposed substitute item. The CONTRACTOR shall submit sufficient information to allow the OWNER to determine that the item of material or item of equipment proposed is essentially equivalent to that named and a substitute therefor.

6.2.4.2 Substitute Construction Methods and Procedures: If a specific means, method, technique, sequence or procedure of construction is shown or indicated in and expressly required by the Contract Documents, the CONTRACTOR may with prior approval of the OWNER furnish or utilize a substitute means, method, technique,

sequence, or procedure of construction. The CONTRACTOR shall submit sufficient information to Owner's Representative to allow the OWNER, in the OWNER's sole discretion, to determine that the substitute proposed is equivalent to that expressly called for by the Contract Documents.

6.2.4.3 OWNER's Evaluation: The OWNER will be allowed a reasonable time within which to evaluate each proposal or submittal made pursuant to paragraph 6.2.4.1.1 and paragraph 6.2.4.1.2. The OWNER will be the sole judge of acceptability. No "approved equal" or substitute shall be ordered, installed, or utilized until the OWNER's review is complete, which will be evidenced by either a Change Order or completion of the Shop Drawing review procedure. The OWNER may require the CONTRACTOR to furnish at the CONTRACTOR's expense a special performance guarantee or other surety bond with respect to any "approved equal" or substitute. The OWNER shall not be responsible for any delay due to review time for any "approved equal" or substitute.

6.2.4.4 CONTRACTOR's Expense: All data to be provided by the CONTRACTOR in support of any proposed "approved equal" or substitute item will be at the CONTRACTOR's expense.

6.2.5 The CONTRACTOR agrees to assign to the OWNER any rights it may have to bring antitrust suits against its Suppliers for overcharges on materials incorporated in the Project growing out of illegal price fixing agreements. The CONTRACTOR further agrees to cooperate with the OWNER should the OWNER wish to prosecute suits against Suppliers for illegal price fixing.

6.3 Progress Schedule:

Unless otherwise directed, the CONTRACTOR shall adhere to the progress schedule established in accordance with paragraph 2.6 as it may be adjusted from time to time as provided below:

.1 The CONTRACTOR shall submit to Owner's Representative for acceptance proposed adjustments in the progress schedule that will not change the Contract Times or Milestones. Such adjustments will conform generally to the progress schedule then in effect.

.2 Proposed adjustments in the progress schedule that will change the Contract Times or Milestones shall be submitted in accordance with the requirements of Article 12. Such adjustments may only be made by a Change Order or Time Extension Request in accordance with Article 12.

6.4 Concerning Subcontractors, Suppliers and Others:

6.4.1 Assignment: The CONTRACTOR agrees to retain direct control of and give direct attention to the fulfillment of this Contract. The CONTRACTOR agrees not to, by Power of Attorney or otherwise, assign said Contract without the prior written consent of the OWNER.

6.4.2 Award of Subcontracts for Portions of the Work: The CONTRACTOR shall not employ any Subcontractor, Supplier or other person or organization, whether initially or as a substitute, against whom the OWNER may have reasonable objection. The CONTRACTOR must provide the OWNER with a list of all Subcontractors, Suppliers, or other persons or organizations it will use in the Work, and such list must be provided prior to the preconstruction conference. Should the OWNER have objections, the OWNER will communicate such objections by Written Notice. If the OWNER requires a change without good cause of any Subcontractor, person or organization previously accepted by OWNER, the Contract Amount may be increased or decreased by the difference in the cost occasioned by any such change, and an appropriate Change Order shall be issued. The CONTRACTOR shall not substitute any Subcontractor, person or organization that has been accepted by the OWNER, unless the substitute has been accepted in writing by the OWNER. No acceptance by the OWNER of any Subcontractor, Supplier or other person or organization shall constitute a waiver of any right of the OWNER to reject defective Work.

6.4.3 The CONTRACTOR shall enter into written agreements with all Subcontractors and Suppliers which specifically bind the Subcontractors or Suppliers to the applicable terms and conditions of the Contract Documents for the benefit of the OWNER and E/A. The OWNER reserves the right to specify that certain requirements shall be adhered to by all Subcontractors and Sub-subcontractors as indicated in other portions of the Contract

Documents and these requirements shall be made a portion of the agreement between the CONTRACTOR and Subcontractor or Supplier.

6.4.4 The CONTRACTOR shall be fully responsible to the OWNER for all acts and omissions of the Subcontractors, Suppliers and other persons and organizations performing or furnishing any of the Work under a direct or indirect contract with the CONTRACTOR just as the CONTRACTOR is responsible for the CONTRACTOR's own acts and omissions. Nothing in the Contract Documents shall create for the benefit of any such Subcontractor, Supplier or other person or organization any contractual relationship between the OWNER and any such Subcontractor, Supplier or other person or organization, nor shall it create any obligation on the part of the OWNER or E/A to pay or to see to the payment of any amounts due any such Subcontractor, Supplier or other person or organization except as may otherwise be required by laws and regulations.

6.4.5 The CONTRACTOR shall be solely responsible for scheduling and coordinating the Work of Subcontractors, Suppliers and other persons and organizations performing or furnishing any of the Work under a direct or indirect contract with the CONTRACTOR. The CONTRACTOR shall require all Subcontractors, Suppliers and such other persons and organizations performing or furnishing any of the Work to communicate with Owner's Representative through the CONTRACTOR.

6.4.6 The divisions and sections of the Specifications and the identifications of any Drawings shall not control the CONTRACTOR in dividing or delineating the Work to be performed by any specific trade.

6.4.7 The CONTRACTOR shall pay each Subcontractor and Supplier their appropriate share of payments made to the CONTRACTOR not later than ten (10) Calendar Days after the CONTRACTOR's receipt of payment from the OWNER.

6.5 Patent Fees and Royalties:

6.5.1 The CONTRACTOR shall be responsible at all times for compliance with applicable patents or copyrights encompassing, in whole or in part, any design, device, material, or process utilized, directly or indirectly, in the performance of the Work or the formulation or presentation of its Bid.

6.5.2 The CONTRACTOR shall pay all royalties and license fees and shall provide, prior to commencement of Work hereunder and at all times during the performance of same, for lawful use of any design, device, material or process covered by letters, patent or copyright by suitable legal agreement with the patentee, copyright holder, or their duly authorized representative whether or not a particular design, device, material, or process is specified by the OWNER.

6.5.3 The CONTRACTOR shall defend all suits or claims for infringement of any patent or copyright and shall save the OWNER harmless from any loss or liability, direct or indirect, arising with respect to the CONTRACTOR's process in the formulation of its bid or the performance of the Work or otherwise arising in connection therewith. The OWNER reserves the right to provide its own defense to any suit or claim of infringement of any patent or copyright in which event the CONTRACTOR shall indemnify and save harmless the OWNER from all costs and expenses of such defense as well as satisfaction of all judgments entered against the OWNER.

6.5.4 The OWNER shall have the right to stop the Work and/or terminate this Agreement at any time in the event the CONTRACTOR fails to disclose to the OWNER that the CONTRACTOR's work methodology includes the use of any infringing design, device, material or process.

6.6 Permits, Fees:

Unless otherwise provided in the Supplemental General Conditions, the CONTRACTOR shall obtain and pay for all construction permits, licenses and fees required for prosecution of the Work.

OWNER will obtain and pay for the following permits, licenses and/or fees, if required:

.1 Site Development Permit.

.2 Building Permit(s).

.3 Texas Department of Transportation permit for work in State rights-of-way.

.4 Railroad Utility License Agreement.

6.7 Laws and Regulations:

6.7.1 The CONTRACTOR shall give all notices and comply with all laws and regulations applicable to furnishing and performing the Work. Except where otherwise expressly required by applicable laws and regulations, neither the OWNER nor E/A shall be responsible for monitoring the CONTRACTOR's compliance with any laws and regulations.

6.7.2 The CONTRACTOR shall plan and execute its operations in compliance with all applicable Federal, State and local laws and regulations, including those concerning control and abatement of water pollution and prevention and control of air pollution.

6.7.3 If the CONTRACTOR performs any Work knowing or having reason to know that it is contrary to laws or regulations, then the CONTRACTOR shall bear all claims, costs, losses and damages arising therefrom; however, it shall not be the CONTRACTOR's primary responsibility to make certain that the Specifications and Drawings are in accordance with laws and regulations, but this does not relieve the CONTRACTOR of the CONTRACTOR's obligations under Article 3.

6.8 Taxes:

6.8.1 The CONTRACTOR shall pay all sales, consumer, use and other similar taxes required to be paid by the CONTRACTOR in accordance with the laws and regulations of the State of Texas.

6.8.2 The OWNER is an exempt organization as defined by Chapter 11 of the Property Tax Code of Texas and is thereby exempt from payment of Sales Tax under Chapter 151, Limited Use Sales, Excise and Use Tax, Texas Tax Code, and Article 1066 (C), Local Sales and Use Tax Act, Revised Civil Statutes of Texas.

6.9 Use of Premises:

6.9.1 The CONTRACTOR shall confine construction equipment, the storage of materials and equipment and the operations of workers to the site and land and areas identified in and permitted by the Contract Documents and other land and areas permitted by laws and regulations, rights-of-way, permits and easements, and shall not unreasonably encumber the premises with construction equipment or other materials or equipment. The CONTRACTOR shall assume full responsibility for any damage to any such land or area, or to the owner or occupant thereof or of any adjacent land or areas, resulting from the performance of the Work. Should any claim be made by any such owner or occupant because of the performance of the Work, the CONTRACTOR shall promptly settle with such other party by negotiation or otherwise resolve the claim by dispute resolution proceeding or at law. The CONTRACTOR shall indemnify, defend and hold harmless the OWNER, E/A, E/A's consultants and anyone directly or indirectly employed by any of them from and against all claims, costs, losses and damages (including court costs and reasonable attorneys' fees) arising out of or resulting from any claim or action, legal or equitable, brought by any such owner or occupant against the OWNER, E/A or any other party indemnified hereunder to the extent caused by or based upon performance of the Work or failure to perform the Work.

6.9.2 During the progress of the Work and on a daily basis, the CONTRACTOR shall keep the premises free from accumulations of waste materials, rubbish and other debris resulting from the Work. At the completion of the Work, the CONTRACTOR shall remove all waste materials, rubbish and debris from and about the premises as well as all tools, appliances, construction equipment and machinery and surplus materials. The CONTRACTOR shall leave the site clean and ready for occupancy by the OWNER at Substantial Completion of the Work. The CONTRACTOR shall, at a minimum, restore to original condition all property not designated for alteration by the Contact Documents.

6.9.3 The CONTRACTOR shall not load nor permit any part of any structure to be loaded in any manner that will endanger the structure, nor shall the CONTRACTOR subject any part of the Work or adjacent property to stresses or pressures that will endanger it.

6.10 Record Documents:

The CONTRACTOR shall maintain in a safe place at the site, or other location acceptable to the OWNER, one (1) record copy of all Drawings, Specifications, Addenda, Change Orders, Change Directives, Field Orders and written interpretations and clarifications (issued pursuant to paragraph 9.5) in good order and annotated to show all changes made during construction. These record documents, together with all final samples and all final Shop Drawings, will be available to the OWNER and E/A for reference during performance of the Work. Upon Substantial Completion of the Work, these record documents, samples and Shop Drawings shall be promptly delivered to Owner's Representative.

6.11 Safety and Protection:

6.11.1 The CONTRACTOR shall be responsible for initiating, maintaining and supervising all safety precautions and programs in connection with the Work. Upon request, and prior to installation of measures, the CONTRACTOR shall submit a site security plan for approval by the OWNER. By reviewing the plan or making recommendations or comments, the OWNER will not assume liability nor will the CONTRACTOR be relieved of liability for damage, injury or loss. The CONTRACTOR shall take all necessary precautions for the safety of and shall provide the necessary protection to prevent damage, injury or loss to:

.1 all persons on the Work site or who may be affected by the Work;

.2 all the Work and materials and equipment to be incorporated therein, whether in storage on or off the site; and

.3 other property at the site or adjacent thereto, including but not limited to, trees, shrubs, lawns, walks, pavements, roadways, structures, utilities and underground facilities not designated for removal, relocation or replacement in the course of construction.

6.11.2 The CONTRACTOR shall comply with all applicable laws and regulations of any public body having jurisdiction for safety of persons or property or to protect them from damage, injury or loss; and shall erect and maintain all necessary safeguards for such safety and protection. The CONTRACTOR shall notify owners of adjacent property and of underground facilities, and utility owners when prosecution of the Work may affect them, and shall cooperate with them in the protection, removal, relocation and replacement of their property. All damage, injury or loss to any property referred to in paragraph 6.11.1.2 and paragraph 6.11.1.3 caused, directly or indirectly, in whole or in part, by the CONTRACTOR, Subcontractor, Supplier or any person or organization directly or indirectly employed by any of them to perform or furnish any of the Work or anyone for whose acts any of them may be liable, shall be remedied by the CONTRACTOR (except damage or loss attributable to the fault of Drawings or Specifications or to the acts or omissions of the OWNER, or E/A, or E/A's consultant or anyone employed by any of them or anyone whose acts any of them may be liable, and not attributable, directly or indirectly, in whole or in part, to the faults or negligence of the CONTRACTOR or any Subcontractor, Supplier or other person or organization directly or indirectly employed by any of them). The CONTRACTOR's duties and responsibilities for safety and protection of the Work shall continue until such time as all the Work is completed and Owner's Representative has issued a notice to the OWNER and the CONTRACTOR in accordance with Article 14 that the Work is acceptable (except as otherwise expressly provided in connection with Substantial Completion).

6.11.3 Safety Representative: The CONTRACTOR shall designate a qualified and experienced safety representative at the site whose duties and responsibilities shall be the prevention of accidents and the maintaining and supervising of safety precautions and programs. Upon request of the OWNER, the CONTRACTOR shall provide certifications or other documentation of the safety representative's qualifications.

6.11.4 Hazard Communication Programs: The CONTRACTOR shall be responsible for coordinating any exchange of material safety data sheets or other hazard communication information required to be made available to or exchanged between or among employers at the site in accordance with laws and regulations.

6.11.5 Emergencies:

6.11.5.1 In emergencies affecting the safety or protection of persons or the Work at the site or adjacent thereto, the CONTRACTOR, without special instruction or authorization from the OWNER or E/A, is obligated to act reasonably to prevent threatened damage, injury or loss and to mitigate damage or loss to the Work. The CONTRACTOR shall give Owner's Representative prompt written notice if the CONTRACTOR believes that any significant changes in the Work or variations from the Contract Documents have been caused thereby. If Owner's Representative determines that a change in the Contract Documents is required because of the action taken by the CONTRACTOR in response to such an emergency, a Change Directive or Change Order will be issued to document the consequences of such action; otherwise the OWNER will not be responsible for the CONTRACTOR's emergency action.

6.11.5.2 Authorized agents of the CONTRACTOR shall respond immediately to call-out at any time of any day or night when circumstances warrant the presence on Project site of the CONTRACTOR or its agent to protect the Work or adjacent property from damage, restriction or limitation or to take such action or measures pertaining to the Work as may be necessary to provide for the safety of the public. Should the CONTRACTOR and/or its agent fail to respond and take action to alleviate such an emergency situation, the OWNER may direct other forces to take action as necessary to remedy the emergency condition, and the OWNER will deduct any cost of such remedial action from the funds due to the CONTRACTOR under this Contract.

6.11.5.3 In the event there is an accident involving injury to any individual on or near the Work, the CONTRACTOR shall notify Owner's Representative within twenty-four (24) hours of the event and shall be responsible for recording the location of the event and the circumstances surrounding the event through photographs, interviewing witnesses, obtaining medical reports and other documentation that describes the event. Copies of such documentation shall be provided to Owner's Representative, for the OWNER's and E/A's records, within forty-eight (48) hours of the event.

6.12 Continuing the Work:

The CONTRACTOR shall carry on the Work and adhere to the progress schedule during all disputes or disagreements with the OWNER. No Work shall be delayed or postponed pending resolution of any disputes or disagreements, except as the OWNER and the CONTRACTOR may agree in writing.

6.13 CONTRACTOR's General Warranty and Guarantee:

6.13.1 The CONTRACTOR warrants and guarantees to the OWNER that all Work will be performed in a good and workmanlike manner in accordance with the Contract Documents and will not be defective. The CONTRACTOR's warranty and guarantee hereunder excludes defects or damage caused by:

.1 abuse, modification or improper maintenance or operation by persons other than the CONTRACTOR, Subcontractors or Suppliers; or

.2 normal wear and tear under normal usage.

6.13.2 The CONTRACTOR's obligation to perform and complete the Work in a good and workmanlike manner in accordance with the Contract Documents shall be absolute. None of the following will constitute acceptance of Work not in accordance with the Contract Documents or a release of the CONTRACTOR's obligation to perform the Work in accordance with the Contract Documents:

.1 observations by Owner's Representative and/or E/A;

.2 recommendation of any progress or final payment by Owner's Representative;

.3 the issuance of a certificate of Substantial Completion or any payment by the OWNER to the CONTRACTOR under the Contract Documents;

.4 use or occupancy of the Work or any part thereof by the OWNER;

.5 any acceptance by the OWNER or any failure to do so;

.6 any review of a Shop Drawing or sample submittal;

.7 any inspection, test or approval by others; or

.8 any correction of defective Work by the OWNER.

6.14 Indemnification:

6.14.1 The CONTRACTOR shall defend, indemnify and hold harmless the OWNER, E/A, E/A's consultants and subconsultants and their respective officers, directors, partners, employees, agents and other consultants and any of them from and against all claims, costs, losses and damages (including but not limited to all fees and charges of engineers, architects, attorneys and other professionals and all court or other dispute resolution costs) arising out of or resulting from the performance of the Work, provided that any such claim, cost, loss or damage:

.1 is attributable to bodily injury, sickness, disease or death, or to injury to or destruction of tangible property (other than the Work itself), including the loss of use resulting therefrom, and

.2 is caused in whole or in part by any negligent act or omission of the CONTRACTOR, any Subcontractor, any Supplier, any person or organization directly or indirectly employed by any of them to perform or furnish any of the Work or anyone for whose acts any of them may be liable, regardless of whether or not caused in part by any negligence or omission of a person or entity indemnified hereunder or whether liability is imposed upon such indemnified party by laws and regulations regardless of the negligence of any such person or entity.

6.14.2 The indemnification obligation under paragraph 6.14.1 shall not be limited in any way by any limitation on the amount or type of damages, or compensation or benefits payable by or for the CONTRACTOR or any such Subcontractor, Supplier or other person or organization under workers' compensation acts, disability benefit acts or other employee benefit acts.

6.14.3 The obligations of the CONTRACTOR under paragraph 6.14.1 shall not extend to the liability of the OWNER, E/A, E/A's consultants, and their officers, directors, partners, employees or agents caused primarily by negligent preparation of maps, drawings, surveys, designs or specifications upon which is placed the applicable state-authorized design professional seal of the OWNER's, E/A's or E/A's consultant's officers, directors, partners, employees or agents.

6.14.4 In the event the CONTRACTOR fails to follow the OWNER's directives concerning use of the site, scheduling or course of construction, or engages in other conduct which proximately causes damage to property based on inverse condemnation or otherwise, then and in that event, the CONTRACTOR shall indemnify the OWNER against all costs resulting from such claims.

6.14.5 In the event the CONTRACTOR unreasonably delays progress of the work being done by others on the site so as to cause loss for which the OWNER becomes liable, then the CONTRACTOR shall reimburse the OWNER for such loss.

6.15 Survival of Obligations:

All representations, indemnifications, warranties and guarantees made in, required by or given in accordance with the Contract Documents, as well as all continuing obligations indicated in the Contract Documents, will survive final payment, completion and acceptance of the Work and termination or completion of the Agreement.

6.16 Losses from Natural Causes:

Unless otherwise specified, all loss or damage to the CONTRACTOR arising out of the nature of the Work to be done or from action of the elements, floods or from unforeseeable circumstances in prosecution of the Work or from unusual obstructions or difficulties which may be encountered in prosecution of the Work, shall be sustained and borne by the CONTRACTOR at its own cost and expense.

6.17 Notice of Claim:

Should the CONTRACTOR suffer injury or damage to person or property because of any error, omission or act of the OWNER or of any of the OWNER's employees or agents or others for whose acts the OWNER is liable, a Claim will be made to the other party within thirty (30) calendar days of the event giving rise to such injury or damage. The provisions of this paragraph 6.17 shall not be construed as a substitute for or a waiver of the provisions of any applicable statute of limitations or statute of repose.

6.18 Liquidated Damages:

At set forth in the Agreement, paragraph 1.2, the CONTRACTOR or its Surety shall be liable for Liquidated Damages for the CONTRACTOR's failure to timely complete the Work or any portion thereof within the Contract Time. See Supplemental Conditions for amount of Liquidated Damages.

ARTICLE 7 - OTHER WORK

7.1 The OWNER may perform other work related to the Project at the site by the OWNER's own forces, or let other contracts therefor, or have other work performed by utility owners. If the CONTRACTOR believes that delay or additional cost is involved because of such action by the OWNER, the CONTRACTOR may make a Claim as provided in Article 11 or Article 12.

7.2 The CONTRACTOR shall afford other contractors who are in a contract with the OWNER and each utility owner (and the OWNER, if the OWNER is performing the additional work with the OWNER's employees) proper and safe access to the site and a reasonable opportunity for the introduction and storage of materials and equipment and the execution of such other work and shall properly connect and coordinate the Work with theirs. Unless otherwise provided in the Contract Documents, the CONTRACTOR shall do all cutting, fitting and patching of the Work that may be required to make its several parts come together properly and integrate with such other work. The CONTRACTOR shall not endanger any work of others by cutting, excavating or otherwise altering their work and will only cut or alter their work with the written consent of Owner's Representative and the other contractors whose work will be affected. The CONTRACTOR shall promptly remedy damage wrongfully caused by the CONTRACTOR to completed or partially completed construction or to property of the OWNER or separate contractors.

7.3 If the proper execution or results of any part of the CONTRACTOR's Work depends upon work performed by others under this Article 7, the CONTRACTOR shall inspect such other work and promptly report to Owner's Representative in writing any delays, defects or deficiencies in such other work that render it unavailable or unsuitable for the proper execution and results of the CONTRACTOR's Work. The CONTRACTOR's failure to report will constitute an acceptance of such other work as fit and proper for integration with the CONTRACTOR's Work except for latent or non-apparent defects and deficiencies in such other work.

7.4 The OWNER shall provide for coordination of the activities of the OWNER's own forces and of each separate contractor with the Work of the CONTRACTOR, who shall cooperate with them. The CONTRACTOR shall participate with other separate contractors and Owner's Representative in reviewing their construction schedules when directed to do so. The CONTRACTOR shall make any revisions to the construction schedule

deemed necessary after a joint review and mutual agreement. The construction schedules shall then constitute the schedules to be used by the CONTRACTOR, separate contractors and the OWNER until subsequently revised.

7.5 Unless otherwise stated herein, costs caused by delays or by improperly timed activities or defective construction shall be borne by the party responsible therefor.

ARTICLE 8 - OWNER'S RESPONSIBILITIES

8.1 Prior to the start of construction, the OWNER will designate in writing a person or entity to act as Owner's Representative during construction. Except as otherwise provided in these General Conditions, the OWNER shall issue all communications to the CONTRACTOR through Owner's Representative.

8.2 The OWNER will not supervise, direct, control or have authority over or be responsible for the CONTRACTOR's means, methods, techniques, sequences or procedures of construction or the safety precautions and programs incident thereto. The OWNER is not responsible for any failure of the CONTRACTOR to comply with laws and regulations applicable to furnishing or performing the Work. The OWNER is not responsible for the CONTRACTOR's failure to perform or furnish the Work in accordance with the Contract Documents. Failure or omission of the OWNER to discover, or object to or condemn any defective Work or material shall not release the CONTRACTOR from the obligation to properly and fully perform the Contract.

8.3 The OWNER is not responsible for the acts or omissions of the CONTRACTOR, or of any Subcontractor, any Supplier, or of any other person or organization performing or furnishing any of the Work.

8.4 Information or services under the OWNER's control shall be furnished by the OWNER with reasonable promptness to avoid delay in the orderly progress of the Work.

8.5 The foregoing are in addition to other duties and responsibilities of the OWNER enumerated herein and especially those in respect to Article 4 (Availability of Lands; Subsurface and Physical Conditions; Reference Points), Article 7 (Other Work) and Article 14 (Payments to the CONTRACTOR and Completion).

8.6 Notice of Claim:

Should the OWNER suffer injury or damage to person or property because of any error, omission or act of the CONTRACTOR or of any of the CONTRACTOR's employees or agents or others for whose acts the CONTRACTOR is liable, a Claim will be made to the other party within thirty (30) calendar days of the event giving rise to such injury or damage. The provisions of this paragraph 8.6 shall not be construed as a substitute for or a waiver of the provisions of any applicable statute of limitations or statute of repose.

ARTICLE 9 - ENGINEER/ARCHITECT'S STATUS DURING CONSTRUCTION

9.1 E/A's Authority and Responsibilities:

9.1.1 The duties and responsibilities and the limitations of authority of E/A during construction are set forth in the Contract Documents and shall not be extended without written consent of the OWNER and E/A. The assignment of any authority, duties or responsibilities to E/A under the Contract Documents, or under any agreement between the OWNER and E/A, or any undertaking, exercise or performance thereof by E/A, is intended to be for the sole and exclusive benefit of the OWNER and is not for the benefit of the CONTRACTOR, Subcontractor, Sub-subcontractor, Supplier, or any other person or organization, or for any surety or employee or agent of any of them.

9.1.2 E/A will not supervise, direct, control or have authority over or be responsible for the CONTRACTOR's means, methods, techniques, sequences or procedures of construction, or the safety precautions and programs incident thereto. E/A is not responsible for any failure of the CONTRACTOR to comply with laws and regulations applicable to the furnishing or performing the Work. E/A is not responsible for the CONTRACTOR's failure to perform or furnish the Work in accordance with the Contract Documents. Failure or omission of E/A to discover, or

object to or condemn any defective Work or material shall not release the CONTRACTOR from the obligation to properly and fully perform the Contract.

9.1.3 E/A is not responsible for the acts or omissions of the CONTRACTOR, or of any Subcontractor, any Supplier, or of any other person or organization performing or furnishing any of the Work.

9.1.4 If the OWNER so directs, E/A will review the final Application for Payment and accompanying documentation and all maintenance and operating instructions, schedules, guarantees, bonds and certificates of inspection, tests and approvals and other documentation required to be delivered by Article 14, but only to determine generally that their content complies with the requirements of, and in the case of certificates of inspections, tests and approvals that the results certified indicate compliance with, the Contract Documents.

9.1.5 The limitations upon authority and responsibility set forth in this paragraph 9.1 shall also apply to E/A's Consultants, Resident Project Representative and assistants.

9.2 E/A as Owner's Representative:

9.2.1 E/A may be designated as Owner's Representative under paragraph 8.1.

9.3 Visits to Site:

If the OWNER so directs, E/A will make visits to the site at intervals appropriate to the various stages of construction as is necessary in order to observe as an experienced and qualified design professional the progress that has been made and the quality of the various aspects of the CONTRACTOR's executed Work. Based on information obtained during such visits and observations, E/A will endeavor for the benefit of the OWNER to determine if the Work is proceeding in accordance with the Contract Documents. E/A will not be required to make exhaustive or continuous on-site inspections to check the quality or quantity of the Work. E/A's efforts will be directed toward providing for the OWNER a greater degree of confidence that the completed Work will conform to the Contract Documents. On the basis of such visits and on-site observations, E/A will keep the OWNER informed of the progress of the Work and will endeavor to guard the OWNER against defective Work. E/A's visits and on-site observations are subject to all the limitations on E/A's authority and responsibility set forth in paragraph 9.1.

9.4 Project Representative:

If the OWNER and E/A agree, E/A will furnish a Resident Project Representative to assist E/A in providing more continuous observation of the Work. The responsibilities and authority and limitations of any such Resident Project Representative and assistants will be as provided in paragraph 9.1 and in the Supplemental General Conditions. The OWNER may designate another representative or agent to represent the OWNER at the site who is not E/A, E/A's consultant, agent or employee.

9.5 Clarifications and Interpretations:

E/A may determine that written clarifications or interpretations of the requirements of the Contract Documents (in the form of drawings or otherwise) are necessary. Such written clarifications or interpretations will be consistent with the intent of and reasonably inferable from the Contract Documents, will be issued with reasonable promptness by Owner's Representative and will be binding on the OWNER and the CONTRACTOR. If the OWNER or the CONTRACTOR believes that a written clarification or interpretation justifies an adjustment in the Contract Amount or the Contract Times, the OWNER or the CONTRACTOR may make a Claim therefor as provided in Article 11 or Article 12.

9.6 Rejecting Defective Work:

E/A will recommend that the OWNER disapprove or reject Work which E/A believes to be defective, or believes will not produce a completed Project that conforms to the Contract Documents or will prejudice the integrity of the design concept of the completed Project as a functioning whole as indicated by the Contract Documents.

ARTICLE 10 - CHANGES IN THE WORK

10.1 Changes:

10.1.1 Without invalidating the Contract and without notice to any surety, the OWNER may, at any time or from time to time, order additions, deletions or revisions in the Work. Such changes in the Work will be authorized by Change Order, Change Directive or Field Order.

10.1.2 Changes in the Work shall be performed under applicable provisions of the Contract Documents, and the CONTRACTOR shall proceed promptly, unless otherwise provided in the Change Order, Change Directive or Field Order.

10.1.3 The CONTRACTOR shall not be entitled to an increase in the Contract Amount or an extension of the Contract Times with respect to any Work performed that is not required by the Contract Documents as amended, modified and supplemented as provided in paragraph 3.3.1 and paragraph 3.3.2, except in the case of an emergency as provided in paragraph 6.11.5 or in the case of uncovering Work as provided in paragraph 13.4.

10.1.4 Except in the case of an emergency as provided in paragraph 6.11.5, a Change Order or Change Directive is required before the CONTRACTOR commences any activities associated with a change in the Work which, in the CONTRACTOR 's opinion, will result in a change in the Contract Amount and/or Contract Times.

10.1.5 If notice of any change affecting the general scope of the Work or the provisions of the Contract Documents (including, but not limited to, Contract Amount or Contract Times) is required by the provisions of any Bond to be given to a surety, the giving of any such notice will be the CONTRACTOR's responsibility, and the amount of each applicable Bond will be adjusted accordingly.

10.2 Change Orders:

10.2.1 The OWNER and the CONTRACTOR shall execute appropriate written Change Orders covering:

.1 a change in the Work;

.2 the amount of the adjustment in the Contract Amount, if any; and

.3 the extent of the adjustment in the Contract Time, if any.

10.2.2 An executed Change Order shall represent the complete, equitable, and final amount of adjustment in the Contract Amount and/or Contract Time owed to the CONTRACTOR or the OWNER as a result of the occurrence or event causing the change in the Work encompassed by the Change Order.

10.3 Change Directives:

10.3.1 The OWNER may by written Change Directive, without invalidating the Contract, order changes in the Work within the general scope of the Contract consisting of additions, deletions or other revisions, the Contract Amount and Contract Time being adjusted as necessary. A Change Directive shall be used in the absence of complete and prompt agreement on the terms of a Change Order.

10.3.2 If the Change Directive provides for an adjustment to the Contract Amount, the adjustment shall be based on the method provided for in paragraph 11.5.

10.3.3 A Change Directive shall be recorded later by preparation and execution of an appropriate Change Order.

10.3.4 Upon receipt of a Change Directive, CONTRACTOR shall promptly proceed with the change in the Work involved.

10.4 Field Order:

10.4.1 Owner's Representative may authorize minor variations in the Work from the requirements of the Contract Documents which do not involve an adjustment in the Contract Amount or the Contract Times and are compatible with the design concept of the completed Project as a functioning whole as indicated by the Contract Documents. These shall be accomplished by written Field Order and shall be binding on the OWNER and on the CONTRACTOR who shall perform the Work involved promptly.

10.4.2 If the CONTRACTOR believes that a Field Order would require an adjustment in the Contract Amount and/or Contract Times, the CONTRACTOR shall make written request to Owner's Representative for a Change Order. Any request by the CONTRACTOR for an adjustment in Contract Amount and/or Contract Times shall be made in writing prior to beginning the work covered by the Field Order.

10.5 No Damages for Delay:

The CONTRACTOR shall receive no compensation for delays or hindrances to the Work. If delay is caused by specific orders given by the OWNER to stop work or by performance of extra Work or by failure of the OWNER to provide information, access to the work, material or necessary instructions for carrying on the Work, then such delay will entitle the CONTRACTOR to an equivalent extension of time, the CONTRACTOR's application for which shall, however, be subject to approval of the OWNER. No such extension of time shall release the CONTRACTOR or surety on its performance bond from all the CONTRACTOR's obligations hereunder which shall remain in full force until discharge of the Contract.

ARTICLE 11 - CHANGE OF CONTRACT AMOUNT

11.1 The Contract Amount is stated in the Agreement and, including authorized adjustments, is the total amount payable by the OWNER to the CONTRACTOR for performance of the Work under the Contract Documents.

11.2 The original Contract Amount may not be increased by more than twenty-five percent (25%) and it may not be decreased more than twenty-five percent (25%) without the consent of the CONTRACTOR to such decrease.

11.3 The Contract Amount shall only be changed by a Change Order. Any claim for an adjustment in the Contract Amount shall be made by Written Notice delivered by the party making the Claim to the other party promptly (but in no event later than thirty (30) calendar days) after the start of the occurrence or event giving rise to the Claim and stating the general nature of the Claim. Notice of the amount of the Claim with supporting data shall be delivered within thirty (30) calendar days after Written Notice of Claim is delivered by claimant, and shall represent that the adjustment claimed covers all known amounts to which claimant is entitled as a result of said occurrence or event. If the OWNER and the CONTRACTOR cannot otherwise agree, all Claims for adjustment in the Contract Amount shall be determined as set out in Article 16.

11.4 Determination of Value of Work:

11.4.1 The value of any Work covered by a Change Order or of any Claim for an adjustment in the Contract Amount will be determined by one or more of the following methods:

.1 by application of unit prices contained in the Contract Documents to the quantities of the items involved.

.2 by a mutually agreed lump sum properly itemized and supported by sufficient substantiating data to permit evaluation.

.3 by cost of Work plus the CONTRACTOR's fee for all overhead costs and profit (determined as provided in paragraph 11.5).

11.4.2 Before using the method described in paragraph 11.4.1.3, the OWNER and the CONTRACTOR agree to negotiate a Change Order using the methods identified in paragraph 11.4.1.1 and paragraph 11.4.1.2, as appropriate, to determine the adjustment in the Contract Amount.

11.5 Cost of Work:

If neither of the methods defined in paragraph 11.4.1.1 or paragraph 11.4.1.2 can be agreed upon before a change in the Work is commenced which will result in an adjustment in the Contract Amount, then the change in the Work will be performed by Change Directive and payment will be made as follows:

.1 For all personnel, the CONTRACTOR will receive the rate or wage specified in the prevailing wage rates established in Section 00900 for each hour that said personnel are actually engaged in such Work, to which will be added an amount equal to twenty-five percent (25%) of the sum thereof as compensation for the CONTRACTOR's and any affected Subcontractor's total overhead and profit. No separate charge will be made by the CONTRACTOR for organization or overhead expenses. For the cost of premiums on public liability insurance, workers' compensation insurance, social security and unemployment insurance, an amount equal to fifty-five percent (55%) of the wages paid personnel, excluding the twenty-five (25%) compensation provided above, will be paid to the CONTRACTOR. The actual cost of the CONTRACTOR's bond(s) on the extra Work will be paid based on invoices from surety. No charge for superintendence will be made unless considered necessary and ordered by the OWNER.

.2 The CONTRACTOR will receive the actual cost, including freight charges, of the materials used on such Work, to which costs will be added a sum equal to twenty-five percent (25%) thereof as compensation for the CONTRACTOR's and any affected Subcontractor's total overhead and profit. In case material invoices indicate a discount may be taken, the actual cost will be the invoice price minus the discount.

.3 For machinery, trucks, power tools, or other similar equipment agreed to be necessary by the OWNER and the CONTRACTOR, the OWNER will allow the CONTRACTOR the rate as given in the latest edition of the Associated General Contractors of America "Contractor's Equipment Cost Guide" as published by Dataquest for each hour that said tools or equipment are in use on such work, which rate includes the cost of fuel, lubricants and repairs. No additional compensation will be allowed on the equipment for the CONTRACTOR's overhead and profit.

.4 The compensation, as herein provided for, shall be received by the CONTRACTOR and any affected Subcontractor as payment in full for work done by Change Directive and will include use of small tools, and total overhead expense and profit. The CONTRACTOR and the Owner's Representative shall compare records of work done by Change Directive at the end of each day. Copies of these records will be made upon forms provided for this purpose by the OWNER and signed by both Owner's Representative and the CONTRACTOR, with one (1) copy being retained by the OWNER and one (1) by the CONTRACTOR. Refusal by the CONTRACTOR to sign these records within two (2) working days of presentation does not invalidate the accuracy of the record.

11.6 Unit Price Work:

11.6.1 Where the Contract Documents provide that all or part of the Work is to be unit price Work, initially the Contract Amount will be deemed to include for all unit price work an amount equal to the sum of the established unit price for each separately identified item of unit price work times the estimated quantity of each item as indicated in the Bid. The estimated quantities of items of unit price work are not guaranteed and are solely for the purpose of comparison of Bids and determining an initial Contract Amount. Determinations of the actual quantities and classifications of unit price work performed by the CONTRACTOR will be made by Owner's Representative. Owner's Representative will review with the CONTRACTOR the preliminary determinations on such matters before rendering a written decision thereon (by recommendation of an Application for Payment or otherwise).

11.6.2 When "plan quantity" is indicated for a bid item, the CONTRACTOR shall be paid the amount specified in the Contract Documents without any measurements.

11.6.3 Each unit price will be deemed to include an amount considered by the CONTRACTOR to be adequate to cover the CONTRACTOR's overhead and profit for each separately identified item.

11.6.4 A Major Item is any individual bid item in the Bid that has a total cost equal to or greater than five percent (5%) of the original Contract Amount or $50,000, whichever is greater, computed on the basis of bid quantities and Contract unit prices.

11.6.5 The OWNER or the CONTRACTOR may make a Claim for an adjustment in the Contract Amount in accordance with Article 11 if:

.1 the actual quantity of any Major Item should become as much as twenty percent (20%) more than or twenty percent (20%) less than in the Bid; or

.2 The CONTRACTOR presents proper documentation contesting the accuracy of "plan quantity," and Owner's Representative verifies quantity and determines original quantity is in error by five percent (5%) or more.

11.6.6 Right to Verify Information: The CONTRACTOR agrees that any designated representative of the OWNER shall have the right to examine the CONTRACTOR's records to verify the accuracy and appropriateness of the pricing data used to price change proposals. Even after a Change Order Proposal has been approved, the CONTRACTOR agrees that if the OWNER later determines the cost and pricing data submitted was inaccurate, incomplete, not current or not in compliance with the terms of this Agreement regarding pricing of change orders, then an appropriate contract price reduction will be made.

11.6.7 Pricing Information Requirements: The CONTRACTOR agrees to provide and require all subcontractors to provide a breakdown of allowable labor and labor burden cost information as outlined herein. This information will be used to evaluate the potential cost of labor and labor burden related to change order work. It is intended that this information represent an accurate estimate of the CONTRACTOR's actual labor and labor burden cost components. This information is not intended to establish fixed billing or change order pricing labor rates. However, at the time change orders are priced the submitted cost data for labor rates may be used to price change order work. The accuracy of any such agreed-upon labor cost components used to price change orders will be subject to later audit. Approved change order amounts may be adjusted later to correct the impact of inaccurate labor cost components if the agreed-upon labor cost components are determined to be inaccurate.

ARTICLE 12 - CHANGE OF CONTRACT TIMES

12.1 Working Day and Calendar Day Contracts:

12.1.1 The Contract Times (or Milestones) shall only be changed by Change Order or Time Extension Request duly executed by both the CONTRACTOR and Owner's Representative. Any claim for an adjustment of the Contract Times (or Milestones) shall be made by Written Notice delivered by the party making the Claim to the other party promptly (but in no event later than thirty (30) calendar days) after the start of the occurrence or event giving rise to the delay and stating the general nature of the delay. Notice of the extent of the delay with supporting data shall be delivered within thirty (30) calendar days after Written Notice of Claim is delivered by claimant, and shall represent that the adjustment claimed is the entire adjustment to which claimant is entitled as a result of said occurrence or event. If the OWNER and the CONTRACTOR cannot otherwise agree, all Claims for adjustment in the Contract Times (or Milestones) shall be determined as set out in Article 16. No Claim for an adjustment in the Contract Times (or Milestones) will be valid if not submitted in accordance with the requirements of this paragraph.

12.1.2 When the CONTRACTOR is at fault and the OWNER stops the Work so that corrections in the Work can be made by the CONTRACTOR, then no extension in time will be allowed.

12.1.3 When the CONTRACTOR is prevented from completing any part of the Work within the Contract Times (or Milestones) due to delay not caused by the CONTRACTOR, an extension of the Contract Times (or Milestones) in an amount equal to the time lost due to such delay shall be the CONTRACTOR's sole and exclusive remedy for such delay. However, adverse weather shall not be considered justification for extension of Contract Times on Calendar Day contracts except as provided for in paragraph 12.2.

12.1.4 The OWNER will consider time extension requests and may grant the CONTRACTOR an extension of time because of:

.1 Changes ordered in the work which justify additional time.

.2 Failure of materials or products being at the Project site due to delays in transportation or failures of Suppliers, which are not the result of the CONTRACTOR's, Subcontractor's or Supplier's negligence. The request for an extension of time shall be supported by a recitation of acts demonstrating that such delays were beyond the control of the CONTRACTOR, including but not limited to, the CONTRACTOR's efforts to overcome such delays documented as follows:

a) Copy of purchase order for delayed item(s) indicating date ordered by the CONTRACTOR/Subcontractor and date purchase order received by Supplier.

b) If item(s) require Shop Drawings or other submittal information in accordance with the Contract Documents, provide record of date submittal(s) forwarded to Owner's Representative, date submittal(s) returned to the CONTRACTOR, and date submittal(s) forwarded to Supplier.

c) Copy of document(s) from Supplier, on Supplier's letterhead, indicating date(s) item(s) would be ready for shipment and/or actual shipment date(s).

d) Copies of all correspondence between the CONTRACTOR/ Subcontractor and Supplier indicating the CONTRACTOR/ Subcontractor's efforts to expedite item(s).

e) If item(s) are being purchased by a Subcontractor, provision of meeting notes, correspondence, and the like which reflect the CONTRACTOR's efforts with the Subcontractor to expedite delivery of the item(s).

.3 When acts of the OWNER, E/A, utility owners or other contractors employed by the OWNER delay progress of work through no fault of the CONTRACTOR.

.4 When the CONTRACTOR is delayed by strikes, lockouts, fires, losses from natural causes, or other unavoidable cause or causes beyond the CONTRACTOR's control.

12.2 Calendar Day Contracts:

Under a Calendar Day Contract, the CONTRACTOR may also be granted an extension of time because of unusual inclement weather that is beyond the normal weather expected for the Williamson and Travis Counties, Texas area. Normal weather which prevents the CONTRACTOR from performing Work is expected during a Calendar Day Contract, and is <u>not</u> a justification for an extension of time. The following delineates the number of days per month for which, for purposes of Calendar Day Contracts, expected normal weather will prevent performance of Work:

January.....	7 days
February.....	7 days
March.....	7 days
April.....	7 days
May.....	8 days
June.....	6 days
July.....	6 days
August.....	5 days
September.....	7 days
October.....	7 days

November.....	7 days
December.....	7 days

Days per month exceeding the number shown above may be credited as Rain Days if a Claim is made in accordance with paragraph 12.1.1 and meets the following definition: a "Rain Day" is any day in which a weather event occurs at the site and is sufficient to prevent the CONTRACTOR from performing units of Work critical to maintaining the project schedule.

ARTICLE 13 - TESTS AND INSPECTIONS; AND CORRECTION OR REMOVAL OF DEFECTIVE WORK

13.1 Notice of Defects:

Prompt notice of all defective Work of which the OWNER or E/A has actual knowledge will be given to the CONTRACTOR. All defective Work may be rejected or corrected as provided for in Article 13.

13.2 Access to Work:

The OWNER, E/A, E/A's Consultants, other representatives and personnel of the OWNER, independent testing laboratories and governmental agencies having jurisdiction will have unrestricted physical access to the Work site for observing, inspecting and testing. The CONTRACTOR shall provide them proper and safe conditions for such access, and advise them of the CONTRACTOR's site safety procedures and programs so that they may comply therewith as applicable.

13.3 Tests and Inspections:

13.3.1 The CONTRACTOR shall give timely notice of readiness of the Work for all required inspections, tests or approvals, and shall cooperate with inspection and testing personnel to facilitate required inspections or tests.

13.3.2 The OWNER shall employ and pay for services of an independent testing laboratory to perform all inspections, tests or approvals required by the Contract Documents except:

.1 for inspections, tests or approvals covered by paragraph 13.3.3 below;

.2 for reinspecting or retesting defective Work; and

.3 as otherwise specifically provided in the Contract Documents.

All testing laboratories shall be those selected by the OWNER.

13.3.3 If laws or regulations of any public body having jurisdiction require any Work (or part thereof) specifically to be inspected, tested or approved by an employee or other representative of such public body, the CONTRACTOR shall assume full responsibility for arranging and obtaining such inspections, tests or approvals, pay all costs in connection therewith and furnish Owner's Representative the required certificates of inspection or approval. The CONTRACTOR shall also be responsible for arranging and obtaining and shall pay all costs in connection with any inspections, tests or approvals required for the OWNER's and E/A's review of materials or equipment to be incorporated in the Work, or of materials, mix designs or equipment submitted for review prior to the CONTRACTOR's purchase thereof for incorporation in the Work.

13.4 Uncovering Work:

13.4.1 If any Work (or the work of others) that is to be inspected, tested or approved is covered by the CONTRACTOR without concurrence of Owner's Representative, or if any Work is covered contrary to the written request of Owner's Representative, it must, if requested by Owner's Representative, be uncovered and recovered at the CONTRACTOR's expense.

13.4.2 If Owner's Representative considers it necessary or advisable that covered Work be observed, inspected or tested, the CONTRACTOR shall uncover, expose or otherwise make available for observation, inspection or testing that portion of the Work in question, furnishing all necessary labor, material and equipment. If it is found that such Work is defective, the CONTRACTOR shall pay all claims, costs, losses and damages caused by, arising out of or resulting from such uncovering, exposure, observation, inspection and testing and of satisfactory replacement or reconstruction (including but not limited to all costs of repair or replacement of work of others); and the OWNER shall be entitled to an appropriate decrease in the Contract Amount, and may make a Claim therefor as provided in Article 11. If, however, such Work is not found to be defective, the CONTRACTOR shall be allowed an increase in the Contract Amount or an extension of the Contract Times (or Milestones), or both, directly attributable to such uncovering, exposure, observation, inspection, testing, replacement and reconstruction; and the CONTRACTOR may make a Claim therefor as provided in Article 11 and Article 12.

13.5 OWNER May Stop the Work:

13.5.1 If the Work is defective, or the CONTRACTOR fails to supply sufficient skilled workers or suitable materials or equipment, or fails to furnish or perform the Work in such a way that the completed Work will conform to the Contract Documents, the OWNER may order the CONTRACTOR to stop the Work, or any portion thereof, until the cause for such order has been eliminated; however, this right of the OWNER to stop the Work shall not give rise to any duty on the part of the OWNER to exercise this right for the benefit of the CONTRACTOR or any surety or other party.

13.5.2 If the CONTRACTOR persistently fails to correct defective Work or submit a satisfactory plan to take corrective action, with procedure and time schedule, the OWNER may order the CONTRACTOR to stop the Work, or any portion thereof, until cause for such order has been eliminated, or take any other action permitted by this Contract. A notice to stop the Work, based on defects, shall not stop calendar or working days charged to the Project.

13.6 Correction or Removal of Defective Work:

If required by the OWNER, the CONTRACTOR shall promptly, as directed, either correct all defective Work, whether or not fabricated, installed or completed, or, if the Work has been rejected by Owner's Representative, remove it from the site and replace it with Work that is not defective. The CONTRACTOR shall correct or remove and replace defective Work, or submit a plan of action detailing how the deficiency will be corrected, within the time frame identified in the notice of defective Work. The CONTRACTOR shall pay all claims, costs, losses and damages caused by or resulting from such correction or removal (including but not limited to all costs of repair or replacement of work of others).

13.7 Warranty period:

13.7.1 If, at any time after the date of Substantial Completion or such longer period of time as may be prescribed by laws or regulations or by the terms of any applicable special guarantee required by the Contract Documents or by any specific provision of the Contract Documents, any Work is found to be defective, the CONTRACTOR shall promptly, without cost to the OWNER and in accordance with the OWNER's written instructions:

(i) correct such defective Work, or, if it has been rejected by the OWNER, remove it from the site and replace it with Work that is not defective, and

(ii) satisfactorily correct or remove and replace any damage to other Work or the work of others resulting therefrom.

If the CONTRACTOR does not promptly comply with the terms of such instructions, or in an emergency where delay would cause serious risk of loss or damage, the OWNER may have the defective Work corrected or the rejected Work removed and replaced, and all claims, costs, losses and damages caused by or resulting from such removal and replacement (including but not limited to all costs of repair or replacement of work of others) will be paid by the CONTRACTOR.

13.7.2 In special circumstances where a particular item of equipment is placed in continuous service before Substantial Completion of all the Work, the warranty period for that item may start to run from an earlier date if so provided in the Contract Documents.

13.8 OWNER May Correct Defective Work:

If the CONTRACTOR fails within a reasonable time after Written Notice of the OWNER to correct defective Work, or to remove and replace rejected Work, or if the CONTRACTOR fails to perform the Work in accordance with the Contract Documents, or if the CONTRACTOR fails to comply with any other provision of the Contract Documents, the OWNER may, after seven (7) calendar days' Written Notice to the CONTRACTOR, correct and remedy any such deficiency. If, in the opinion of Owner's Representative, significant progress has not been made during this seven (7) calendar day period to correct the deficiency, the OWNER may exercise any actions necessary to remedy the deficiency. In exercising the rights and remedies under this paragraph, the OWNER shall proceed expeditiously. In connection with such corrective and remedial action, the OWNER may exclude the CONTRACTOR from all or part of the site, take possession of all or part of the Work, and suspend the CONTRACTOR's services related thereto, and incorporate in the Work all materials and equipment stored at the site or for which the OWNER has paid the CONTRACTOR but which are stored elsewhere. The CONTRACTOR shall allow the OWNER, its agents and employees, the OWNER's other contractors, E/A and E/A's consultants access to the site to enable the OWNER to exercise the rights and remedies under this paragraph. All claims, costs, losses and damages incurred or sustained by the OWNER in exercising such rights and remedies will be charged against the CONTRACTOR and a Change Order will be issued incorporating the necessary revisions in the Contract Documents with respect to the Work. Such claims, costs, losses and damages will include but not be limited to all costs of repair or replacement of work of others destroyed or damaged by correction, removal or replacement of the CONTRACTOR's defective Work. The CONTRACTOR shall not be allowed an extension of the Contract Times (or Milestones), or claims of damage because of any delay in the performance of the Work attributable to the exercise by the OWNER of the OWNER's rights and remedies hereunder.

ARTICLE 14 - PAYMENTS TO CONTRACTOR AND COMPLETION

14.1 Application for Progress Payment:

14.1.1 Not more than once per month, the CONTRACTOR shall submit to Owner's Representative for review an Application for Payment, in a form acceptable to the OWNER, filled out and signed by the CONTRACTOR covering the Work completed as of the date of the Application and accompanied by such supporting documentation as is required by the Contract Documents.

14.1.2 Such applications shall not include requests for payment on account of changes in the Work which have been properly authorized by Change Directives but not yet included in Change Orders.

14.1.3 Such applications shall not include requests for payment of amounts the CONTRACTOR does not intend to pay to a Subcontractor or Supplier because of a dispute or other reason.

14.1.4 Owner will not pay for materials or equipment not incorporated in the work but delivered and suitably stored at the site or at another location. Payment will be made by Owner only for work completed in accordance with the plans and contract documents.

14.1.5 Where the original Contract Amount is less than $400,000, the OWNER will pay to the CONTRACTOR the total amount of approved Application for Payment, less ten percent (10%) of the amount thereof, which ten percent (10%) will be retained until final payment, less all previous payments and less all sums that may be retained by the OWNER under the terms of this Agreement. Where the original Contract Amount is $400,000 or more, the OWNER will pay to the CONTRACTOR the total amount of approved Application for Payment, less five percent (5%) of the amount thereof, which five percent (5%) will be retained until final payment, less all previous payments and less all sums that may be retained by the OWNER under the terms of this Agreement. In either case, if the Work is near completion and delay occurs due to no fault or neglect of the CONTRACTOR, the OWNER may pay a portion of the retained amount to the CONTRACTOR. The CONTRACTOR, at the OWNER's option, may be relieved of the

obligation to complete the Work and, thereupon, the CONTRACTOR shall receive payment of the balance due under the Contract subject to the conditions stated under paragraph 15.2.

14.1.6 Applications for Payment shall include the following documentation:

.1 updated progress schedule;

.2 monthly subcontractor report; and

.3 any other documentation required under the Supplemental General Conditions.

14.2 CONTRACTOR's Warranty of Title:

The CONTRACTOR warrants and guarantees that title to all Work, materials and equipment covered by any Application for Payment, whether incorporated in the Project or not, will pass to the OWNER not later than the time of payment to the CONTRACTOR free and clear of all liens.

14.3 Review of Applications for Progress Payment:

14.3.1 Owner's Representative will, within seven (7) calendar days after receipt of each Application for Payment, either indicate a recommendation for payment and forward the Application for processing by the OWNER, or return the Application to the CONTRACTOR indicating Owner's Representative's reasons for refusing to recommend payment. In the latter case, the CONTRACTOR may make the necessary corrections and resubmit the Application.

14.3.2 Owner's Representative's recommendation of any payment requested in an Application for Payment will constitute a representation by Owner's Representative, based upon Owner's Representative's on-site observations of the executed Work and on Owner's Representative's review of the Application for Payment and the accompanying data and schedules, that to the best of Owner's Representative's knowledge, information and belief:

.1 the Work has progressed to the point indicated; and

.2 the quality of the Work is in accordance with the Contract Documents (subject to an evaluation of the Work as a functioning whole prior to or upon Substantial Completion, to the results of any subsequent tests called for in the Contract Documents, to a final determination of quantities and classifications for unit price Work, and to any other qualifications stated in the recommendation).

14.3.3 By recommending any such payment, Owner's Representative will not thereby be deemed to have represented that:

.1 exhaustive or continuous on-site inspections have been made to check the quality or the quantity of the Work;

.2 examination has been made to ascertain how or for what purpose the CONTRACTOR has used money previously paid on account of the Contract Amount;

.3 the CONTRACTOR's construction means, methods, techniques, sequences or procedures have been reviewed; or

.4 that there may not be other matters or issues between the parties that might entitle the CONTRACTOR to be paid additionally by the OWNER or entitle the OWNER to withhold payment to the CONTRACTOR.

14.4 Decisions to Withhold Payment:

14.4.1 The OWNER may withhold or nullify the whole or part of any payment to such extent as may be necessary on account of:

.1 defective Work not remedied;

.2 reasonable evidence that the Work cannot be completed for the unpaid balance of the Contract Amount;

.3 damage to the OWNER or another contractor;

.4 reasonable evidence that the Work will not be completed within the Contract Time, and that the unpaid balance would not be adequate to cover actual or liquidated damages for the anticipated delay;

.5 failure of the CONTRACTOR to submit a schedule of values in accordance with the Contract Documents;

.6 failure of the CONTRACTOR to submit a submittal schedule in accordance with the Contract Documents;

.7 failure of the CONTRACTOR to submit or update construction schedules in accordance with the Contract Documents;

.8 failure of the CONTRACTOR to maintain a record of changes on drawings and documents;

.9 failure of the CONTRACTOR to maintain weekly payroll reports;

.10 failure of the CONTRACTOR to submit monthly subcontractor reports;

.11 the CONTRACTOR's neglect or unsatisfactory prosecution of the Work, including failure to clean up; or

.12 failure of the CONTRACTOR to comply with any provision of the Contract Documents.

14.4.2 When the above reasons for withholding payment are removed, the CONTRACTOR shall resubmit a statement for the value of Work performed. Payment will be made within thirty (30) calendar days of receipt of approved Application for Payment.

14.5 Delayed Payments:

Should the OWNER fail to make payment to the CONTRACTOR of a sum named in any Application for Payment within thirty (30) calendar days after the day on which the OWNER received the mutually acceptable Application for Payment, then the OWNER will pay to the CONTRACTOR, in addition to the sum shown as due by such Application for Payment, interest thereon at the rate of one percent (1%) per month from date due until fully paid, which shall fully liquidate any injury to the CONTRACTOR growing out of such delay in payment.

14.6 Arrears:

No money shall be paid by the OWNER upon any claim, debt, demand or account whatsoever, to any person, firm or corporation who is in arrears to the OWNER; and the OWNER shall be entitled to counterclaim and offset against any such debt, claim, demand or account so in arrears and no assignment or transfer of such debt, claim, demand or account, shall affect the right of the OWNER to so offset said amounts, and associated penalties and interest if applicable, against the same.

14.7 Substantial Completion:

14.7.1 If a Certificate of Occupancy is required by public authorities having jurisdiction over the Work, said certificate shall be issued before the Work or any portion thereof is considered substantially complete. When the CONTRACTOR considers that the Work, or a portion thereof which the OWNER agrees to accept separately, is

substantially complete, the CONTRACTOR shall notify Owner's Representative and request a determination as to whether the Work or designated portion thereof is substantially complete. If Owner's Representative does not consider the Work substantially complete, Owner's Representative will notify the CONTRACTOR giving reasons therefor. Failure on the OWNER's part to list a reason does not alter the responsibility of the CONTRACTOR to complete all Work in accordance with the Contract Documents. After satisfactorily completing items identified by Owner's Representative, the CONTRACTOR shall then submit another request for Owner's Representative to determine substantial completion. If Owner's Representative considers the Work substantially complete, Owner's Representative will prepare and deliver a certificate of Substantial Completion which shall establish the date of Substantial Completion, shall include a punch list of items to be completed or corrected before final payment, shall establish the time within which the CONTRACTOR shall finish the punch list, and shall establish responsibilities of the OWNER and the CONTRACTOR for security, maintenance, heat, utilities, damage to the Work, warranty and insurance. Failure to include an item on the punch list does not alter the responsibility of the CONTRACTOR to complete all Work in accordance with the Contract Documents. The certificate of Substantial Completion shall be signed by the OWNER and the CONTRACTOR to evidence acceptance of the responsibilities assigned to them in such certificate.

14.7.2 The OWNER shall have the right to exclude the CONTRACTOR from the Work after the date of Substantial Completion, but the OWNER will allow the CONTRACTOR reasonable access to complete or correct items on the punch list.

14.8 Partial Utilization:

The OWNER, at the OWNER's sole option, shall have the right to take possession of and use any completed or partially completed portion of the Work regardless of the time for completing the entire Work. The OWNER's exercise of such use and possession shall not be construed to mean that the OWNER acknowledges that any part of the Work so possessed and used is substantially complete or that it is accepted by OWNER, and the OWNER's exercise of such use and possession shall not relieve the CONTRACTOR of its responsibility to complete all Work in accordance with the Contract Documents.

14.9 Final Inspection:

Upon Written Notice from the CONTRACTOR that the entire Work or an agreed portion thereof is complete, Owner's Representative will make a final inspection with the CONTRACTOR and provide Written Notice of all particulars in which this inspection reveals that the Work is incomplete or defective. The CONTRACTOR shall immediately take such measures as are necessary to complete such Work or remedy such deficiencies.

14.10 Final Application for Payment:

The CONTRACTOR may make application for final payment following the procedure for progress payments after the CONTRACTOR has completed all such corrections to the satisfaction of Owner's Representative and delivered the following documents:

.1 Three (3) complete operating and maintenance manuals, each containing maintenance and operating instructions, schedules, guarantees, and other documentation required by the Contract Documents;

.2 Record documents (as provided in paragraph 6.10);

.3 Consent of surety, if any, to final payment. If surety is not provided, complete and legally effective releases or waivers (satisfactory to the OWNER) of all claims arising out of or filed in connection with the Work;

.4 Certificate evidencing that insurance required by the Supplemental General Conditions will remain in force after final payment and through any warranty period;

.5 Non-Use of Asbestos Affidavit (After Construction); and

.6 Any other documentation called for in the Contract Documents.

14.11 Final Payment and Acceptance:

14.11.1 If, on the basis of observation of the Work during construction, final inspection, and review of the final Application for Payment and accompanying documentation as required by the Contract Documents, Owner's Representative is satisfied that the Work has been completed and the CONTRACTOR's other obligations under the Contract Documents have been fulfilled, Owner's Representative will recommend the final Application for Payment and thereby notify the OWNER, who will pay to the CONTRACTOR the balance due the CONTRACTOR under the terms of the Contract.

14.11.2 As Contract Time is measured to Final Completion, Owner's Representative will issue a letter of final acceptance to the CONTRACTOR which establishes the Final Completion date and initiates any warranty period.

14.11.3 Final payment is considered to have taken place when the CONTRACTOR or any of its representatives negotiates the OWNER's final payment check, whether labeled final or not, for cash or deposits check in any financial institution for its monetary return.

14.12 Waiver of Claims:

The making and acceptance of final payment will constitute:

.1 a waiver of claims by the OWNER against the CONTRACTOR, except claims arising from unsettled claims, from defective Work appearing after final inspection, from failure to comply with the Contract Documents or the terms of any warranty specified therein, or from the CONTRACTOR's continuing obligations under the Contract Documents; and

.2 a waiver of all claims by the CONTRACTOR against the OWNER other than those previously made in writing and still unsettled.

ARTICLE 15 - SUSPENSION OF WORK AND TERMINATION

15.1 OWNER May Suspend Work Without Cause and for Convenience:

At any time and without cause and for convenience, the OWNER may suspend the Work or any portion thereof for a period of not more than ninety (90) calendar days by written agreement or by Written Notice to the CONTRACTOR which will fix the date on which the Work will be resumed. The CONTRACTOR shall resume the Work on the date so fixed. The CONTRACTOR may be allowed an adjustment in the Contract Amount or an extension of the Contract Times, or both, directly attributable to any such suspension if the CONTRACTOR makes an approved Claim therefor as provided in Article 11 and Article 12.

15.2 OWNER May Terminate Without Cause:

Upon seven (7) calendar days' Written Notice to the CONTRACTOR, the OWNER may, without cause and without prejudice to any right or remedy of the OWNER, elect to terminate the Agreement. In such case, the CONTRACTOR shall be paid (without duplication of any items):

.1 for completed and acceptable Work executed in accordance with the Contract Documents prior to the effective date of termination;

.2 for all claims incurred in settlement of terminated contracts with Suppliers, Subcontractors, and others. The CONTRACTOR agrees to negotiate in good faith with Subcontractors, Suppliers and others to mitigate the OWNER's cost; and

.3 for anticipated profits on entire Contract not previously paid.

15.3 OWNER May Terminate With Cause:

15.3.1 Upon the occurrence of any one or more of the following events:

.1 if the CONTRACTOR persistently fails to perform the Work in accordance with the Contract Documents;

.2 if the CONTRACTOR disregards laws or regulations of any public body having jurisdiction;

.3 if the CONTRACTOR disregards the authority of Owner's Representative;

.4 if the CONTRACTOR makes fraudulent statements;

.5 if the CONTRACTOR fails to maintain a work force adequate to accomplish the Work within the Contract Time;

.6 if the CONTRACTOR fails to make adequate progress and endangers successful completion of the Contract; or

.7 if the CONTRACTOR otherwise violates in any substantial way any provisions of the Contract Documents;

The OWNER may, after giving the CONTRACTOR (and the surety, if any) seven (7) calendar days' Written Notice terminate the services of the CONTRACTOR. The OWNER, at its option, may proceed with negotiation with surety for completion of the Work. Alternatively, the OWNER may under these circumstances exclude the CONTRACTOR from the site and take possession of the Work (without liability to the CONTRACTOR for trespass or conversion), incorporate in the Work all materials and equipment stored at the site or for which the OWNER has paid the CONTRACTOR but which are stored elsewhere, and finish the Work as the OWNER may deem expedient. In such case the CONTRACTOR shall not be entitled to receive any further payment until the Work is finished. If the unpaid balance of the Contract Amount exceeds all claims, costs, losses and damages sustained by the OWNER arising out of or resulting from completing the Work, such excess will be paid to the CONTRACTOR. If such claims, costs, losses and damage exceed such unpaid balance, the CONTRACTOR or surety shall pay the difference to the OWNER.

15.3.2 Where the CONTRACTOR's services have been so terminated by the OWNER, the termination will not affect any rights or remedies of the OWNER against the CONTRACTOR and surety then existing or which may thereafter accrue. Any retention or payment of amounts due the CONTRACTOR by the OWNER will not release the CONTRACTOR from liability. In the event the OWNER terminates the Contract with cause, the OWNER may reject any and all bids submitted by the CONTRACTOR for up to three (3) years.

15.4 CONTRACTOR May Stop Work or Terminate:

If through no act or fault of the CONTRACTOR, the Work is suspended for a period of more than ninety (90) calendar days by the OWNER or under an order of court or other public authority, or (except during disputes) Owner's Representative fails to forward for processing any mutually acceptable Application for Payment within thirty (30) calendar days after it is submitted, or (except during disputes) the OWNER fails for sixty (60) calendar days after it is submitted to pay the CONTRACTOR any sum finally determined by the OWNER to be due, then the CONTRACTOR may, upon seven (7) calendar days' Written Notice to the OWNER, and provided the OWNER does not remedy such suspension or failure within that time, terminate the Agreement and recover from the OWNER payment on the same terms as provided in paragraph 15.2. In lieu of terminating the Agreement and without prejudice to any other right or remedy, if (except during disputes) Owner's Representative has failed to forward for processing any mutually acceptable Application for Payment within thirty (30) calendar days after it is submitted, or (except during disputes) the OWNER has failed for sixty (60) calendar days after it is submitted to pay the CONTRACTOR any sum finally determined by the OWNER to be due, the CONTRACTOR may upon seven (7) calendar days' Written Notice to the OWNER stop the Work until payment of all such amounts due the CONTRACTOR, including interest thereon. The provisions of this paragraph 15.4 are not intended to preclude the CONTRACTOR from making a Claim under Article 11 and Article 12 for an increase in Contract Amount or Contract Times or otherwise for expenses or damage directly attributable to the CONTRACTOR's stopping Work as permitted by this paragraph.

ARTICLE 16 - DISPUTE RESOLUTION

16.1 Filing of Claims:

16.1.1 Claims arising from the circumstances identified in paragraphs 3.2, 4.1, 4.2.2, 4.2.4, 6.4.2, 6.11.5.2, 6.17, 7.5, 8.6, 9.5, 10.4.2, 13.8, 15.1, 15.2, 15.3, or 15.4, or other occurrences or events, shall be made by Written Notice delivered by the party making the Claim to the other party within thirty (30) calendar days after the start of the occurrence or event giving rise to the Claim and stating the general nature of the Claim. Notice of the amount of the Claim with supporting data shall be delivered within thirty (30) calendar days after Written Notice of Claim is delivered by claimant and shall represent that the adjustment claimed covers all known amounts to which claimant is entitled.

16.1.2 Within thirty (30) calendar days of receipt of notice of the amount of the Claim with supporting data, Owner's Representative and the CONTRACTOR shall meet to discuss the Claim, after which an offer of settlement or notification of no settlement offer will be made to claimant. If claimant is not satisfied with the proposal presented, claimant shall have thirty (30) calendar days in which to:

.1 submit additional supporting data requested by the other party;

.2 modify the initial Claim; or

.3 request Alternative Dispute Resolution.

16.2 Alternative Dispute Resolution:

16.2.1 If a dispute exists concerning a Claim, the parties agree to use the following procedure prior to pursuing any other available remedies. The OWNER reserves the right to include E/A as a party.

16.2.2 Negotiating with Previously Uninvolved Personnel: Either party may make a written request for a meeting to be held between representatives of each party within fourteen (14) calendar days of the request or such later period that the parties may agree to. Each party shall endeavor to include, at a minimum, one (1) previously uninvolved senior level decision maker empowered to negotiate on behalf of their organization. The purpose of this and subsequent meetings will be good faith negotiations of the matters constituting the dispute. Negotiations shall be concluded within thirty (30) calendar days of the first meeting, unless mutually agreed otherwise. This step may

be waived by written agreement of both parties, in which event the parties may proceed directly to mediation as described below.

16.2.3 Mediation:

16.2.3.1 If the procedure described in paragraph 16.2.2 proves unsuccessful or is waived pursuant to its terms, the parties shall initiate the mediation process. The parties agree to select within thirty (30) calendar days one (1) mediator trained in mediation skills, to assist with resolution of the dispute. The OWNER and the CONTRACTOR agree to act in good faith in the selection of the mediator and to give consideration to qualified individuals nominated to act as mediator. Nothing in this agreement prevents the parties from relying on the skills of a person who also is trained in the subject matter of the dispute and/or a contract interpretation expert.

16.2.3.2 Mediation is a forum in which an impartial person, the mediator, facilitates communication between parties to promote reconciliation, settlement, or understanding among them. The parties hereby agree that mediation, at a minimum, shall provide for 1) conducting an on-site investigation, if appropriate, by the mediator for fact-gathering purposes, 2) a meeting of all parties for the exchange of points of view and 3) separate meetings between the mediator and each party to the dispute for the formulation of resolution alternatives. The parties agree to participate in mediation in good faith for up to thirty (30) calendar days from the date of the first mediation session, unless mutually agreed otherwise. Should the parties fail to reach a resolution of the dispute through mediation, then each party is released to pursue other remedies available to them.

ARTICLE 17 – RIGHT TO AUDIT

17.1 Right to Audit:

Whenever the OWNER enters into any type of contractual arrangement with the CONTRACTOR, then the CONTRACTOR's "records" shall upon reasonable notice be open to inspection and subject to audit and/or reproduction during normal business working hours. The OWNER's representative, or an outside representative engaged by the OWNER, may perform such audits. The CONTRACTOR shall maintain all records relating to this Agreement for four (4) years from the date of final payment under this Agreement, or until pending litigation has been completely and fully resolved, whichever occurs later.

17.1.1 The OWNER shall have the exclusive right to examine the records of the CONTRACTOR. The term "records" as referred to herein shall include any and all information, materials and data of every kind and character, including without limitation records, books, papers, documents, contracts, schedules, commitments, arrangements, notes, daily diaries, reports, drawings, receipts, vouchers and memoranda, and any and all other agreements, sources of information and matters that may, in the OWNER's judgment, have any bearing on or pertain to any matters, rights, duties or obligations under or covered by any contract document. Such records shall include (hard copy, as well as computer-readable data if it can be made available), written policies and procedures, time sheets, payroll registers, cancelled checks, personnel file data, correspondence, general ledger entries, and any other record in the CONTRACTOR's possession which may have a bearing on matters of interest to the OWNER in connection with the CONTRACTOR's dealings with the OWNER (all of the foregoing are hereinafter referred to as "records"). In addition, the CONTRACTOR shall permit interviews of employees as well as agents, representatives, vendors, subcontractors and other third parties paid by the CONTRACTOR to the extent necessary to adequately permit evaluation and verification of the following:

a) The CONTRACTOR's compliance with contract requirements;

b) The CONTRACTOR's compliance with the OWNER'S business ethics policies; and

c) If necessary, the extent of the Work performed by the CONTRACTOR at the time of contract termination.

17.1.2 The CONTRACTOR shall require all payees (examples of payees include subcontractors, insurance agents, material suppliers, etc.) to comply with the provisions of this Article 17 by securing the requirements hereof in a

written agreement between the CONTRACTOR and payee. Such requirements include a flow-down right of audit provision in contracts with payees that also apply to subcontractors and sub-subcontractors, material suppliers, etc. The CONTRACTOR shall cooperate fully and shall require Related Parties and all of the CONTRACTOR's subcontractors to cooperate fully in furnishing or in making available to the OWNER from time to time whenever requested, in an expeditious manner, any and all such information, materials, and data.

17.1.3 The OWNER's authorized representative or designee shall have reasonable access to the CONTRACTOR's facilities, shall be allowed to interview all current or former employees to discuss matters pertinent to the performance of this Agreement, and shall be provided adequate and appropriate work space in order to conduct audits in compliance with this Article 17.

17.1.4 If an audit inspection or examination in accordance with this Article 17 discloses overpricing or overcharges of any nature by the CONTRACTOR to the OWNER in excess of one-half of one percent (.5%) of the total contract billings, then the reasonable actual cost of the OWNER's audit shall be reimbursed to the OWNER by the CONTRACTOR. Any adjustments and/or payments, which must be made as a result of any such audit or inspection of the CONTRACTOR's invoices and/or records, shall be made within a reasonable amount of time (not to exceed 90 days) from presentation of the OWNER's findings to the CONTRACTOR.

17.1.5 The CONTRACTOR shall take reasonable actions to prevent any actions or conditions which could result in a conflict with the OWNER's best interests. These obligations shall apply to the activities of the CONTRACTOR's employees, agents, subcontractors, etc. in their dealings and relations with the OWNER's current and former employees and their relatives. For example, the CONTRACTOR's employees, agents or subcontractors should not make or provide to be made any employment, gifts, extravagant entertainment, payments, loans or other considerations to the OWNER's representatives, employees or their relatives.

17.1.6 It is also understood and agreed by the CONTRACTOR that any solicitation of gifts or any other item of value by anyone representing the OWNER is to be reported within two (2) business working days to the OWNER at the following telephone number: 512-218-5401. Failure to report any such solicitations or offers shall be deemed a material breach of contract entitling the OWNER to pursue damages resulting from the failure to comply with this provision.

ARTICLE 18 – MISCELLANEOUS

18.1 Venue:

In the event of any suit at law or in equity involving the Contract, venue shall be in Williamson County, Texas and the laws of the state of Texas shall apply to Contract interpretation and enforcement.

18.2 Extent of Agreement:

This Contract represents the entire and integrated agreement between the OWNER and the CONTRACTOR and supersedes all prior negotiations, representations or agreements, either written or oral.

18.3 Cumulative Remedies:

The rights and remedies available to the parties are not to be construed in any way as a limitation of any rights and remedies available to any or all of them which are otherwise imposed or available by laws or regulations, by special warranty or guarantees or by other provisions of the Contract Documents, and the provisions of this paragraph will be as effective as if repeated specifically in the Contract Documents in connection with each particular duty, obligation, right and remedy to which they apply.

18.4 Severability:

If any word, phrase, clause, sentence or provision of the Contract, or the application of same to any person or set of circumstances is for any reason held to be unconstitutional, invalid or unenforceable, that finding shall only effect such word, phrase, clause, sentence or provision, and such finding shall not effect the remaining portions of this Contract; this being the intent of the parties in entering into the Contract; and all provisions of the Contract are declared to be severable for this purpose.

18.5 Independent Contractor

The Contract shall not be construed as creating an employer/employee relationship, a partnership, or a joint venture. The CONTRACTOR's services shall be those of an independent contractor. The CONTRACTOR agrees and understands that the Contract does not grant any rights or privileges established for employees of the OWNER.

18.6 Prohibition of Gratuities

The OWNER may, by Written Notice to the CONTRACTOR, terminate the Contract without liability if is determined by the OWNER that gratuities were offered or given by the CONTRACTOR or any agent or representative of the CONTRACTOR to any officer or employee of the OWNER with a view toward securing the Contract or securing favorable treatment with respect to the awarding or amending or the making of any determinations with respect to the performing of such Contract. In the event the Contract is terminated by the OWNER pursuant to this provision, the OWNER shall be entitled, in addition to any other rights and remedies, to recover or withhold the amount of the cost incurred by the CONTRACTOR in providing such gratuities.

18.7 Prohibition Against Personal Interest in Contracts

No officer, employee, independent consultant, or elected official of the OWNER who is involved in the development, evaluation, or decision-making process of the performance of any solicitation shall have a financial interest, direct or indirect, in the Contract resulting from that solicitation. Any violation of this provision, with the knowledge, expressed or implied, of the CONTRACTOR shall render the Contract voidable by the OWNER.

End of General Conditions

00800 SUPPLEMENTAL GENERAL CONDITIONS

SUPPLEMENTAL GENERAL CONDITIONS TO AGREEMENT FOR CONSTRUCTION SERVICES

The Supplemental General Conditions contained herein shall amend or supplement the General Conditions, Section 00700.

ARTICLE 1 - DEFINITIONS

1.16 Engineer/Architect (E/A):

Add the following:

Name (Representative): Danny Halden, P.E.
Firm: City of Round Rock
Address: 2008 Enterprise Drive
City, State, Zip: Round Rock, Texas 78664
Telephone: 512-218-6610
Facsimile: 512-218-5536
Email: dhalden@roundrocktexas.gov

1.27 Owner's Representative:

Add the following:

Name: Danny Halden, P.E. Title: City Engineer
Address: 2008 Enterprise Drive
City, State, Zip: Round Rock, Texas 78664
Telephone: 512-218-6610
Facsimile: 512-218-5536
Email: dhalden@roundrocktexas.gov

ARTICLE 6 - CONTRACTOR'S RESPONSIBILITIES

6.18 Liquidated Damages

Add the following:

1. CONTRACTOR SHALL PAY LIQUIDATED DAMAGES IN THE AMOUNT OF one thousand AND NO/100 DOLLARS $1,000.00 PER DAY FOR EACH DAY BEYOND THE DATE ESTABLISHED THEREFOR THAT THE CONTRACTOR FAILS TO ACHIEVE SUBSTANTIAL COMPLETION, AND FOR WHICH OWNER IS UNABLE TO UTILIZE THE IMPROVEMENTS AND FACILITIES DUE TO THE FAILURE OF CONTRACTOR TO HAVE ACHIEVED SUBSTANTIAL COMPLETION IN ACCORDANCE WITH THE CONTRACT.

END OF SUPPLEMENTAL GENERAL CONDITIONS

00900 SPECIAL CONDITIONS

SECTION 01-INFORMATION

01-01 COPIES OF PLANS AND SPECIFICATIONS FURNISHED

The Agreement will be prepared in not less than five (5) counterpart (original signed) sets. The City will furnish to the Contractor two (2) sets of conforming Contract Documents and Specifications unless otherwise specified.

01-02 GOVERNING CODES

All construction as provided for under these Plans and Specifications shall be governed by any existing Resolutions, Codes and Ordinances, and any subsequent amendments or revisions thereto as set forth by the City.

01-03 LOCATION

The location of work shall be as set forth in the Notice to Bidders and as indicated on the Plans.

01-04 USAGE OF WATER

All water used during construction shall be provided by the City and shall be metered. The City shall specify the location from which the Contractor is to procure water. The Contractor shall be responsible for obtaining a bulk water permit from the City and providing all apparatus necessary for procuring, storing, transporting and using water during construction. The Contractor shall strive to use no more water than reasonable to perform the work associated with this Contract and shall avoid waste. The Contractor will be required to pay for all water used if it is found that waste is occurring during construction.

SECTION 02-SPECIAL CONSIDERATIONS

02-01 CROSSING UTILITIES

Prior to commencing the Work associated with this Contract, it shall be the Contractor's responsibility to make arrangements with the Owners of utility companies to uncover their particular utility lines or otherwise confirm their location. Certain utility companies perform such services at their own expense, however, where such is not the case, the Contractor will cause such work to be done at his own expense.

02-02 UTILITY SERVICES FOR CONSTRUCTION

The Contractor will be responsible for providing his own utility services while performing the Work associated with this Contract. Provision of said utility services shall be subsidiary to the various bid items and no additional payment will be made for this item.

02-03 WAGE RATES

Wage Rates (Information From Chapter 2258, Texas Government Code Title 10)

2288.021. Duty of Government Entity to Pay Prevailing Wage Rates

a. The State or any political subdivision of the State shall pay a worker employed by it or on behalf of it:
   (1) not less than the general prevailing rate of per diem wages for work of a similar character in the locality in which the work is performed; and
   (2) not less than the general prevailing rate of per diem wages for legal holiday and overtime work.

b. Subsection (a) does not apply to maintenance work.

c. A worker is employed on a public work for the purposes of this section if a Contractor or Subcontractor in the execution of a contract for the public work with the State, a political subdivision of the State or any officer or public body of the State or a political subdivision of the State, employs the worker.

2258.023. Prevailing Wage Rates to be Paid by Contractor and Subcontractor; Penalty

a. The contractor who is awarded a contract by a public body, or a Subcontractor of the Contractor, shall pay not less than the rates determined under Section 2258.022 to a worker employed by it in the execution of the contract.

b. A Contractor or Subcontractor who violates this section shall pay to the state or a political subdivision of the state on whose behalf the contract is made, $60 for each worker employed for each calendar day or part of the day that the worker is paid less than the wage rates stipulated in the contract. A public body awarding a contract shall specify this penalty in the contract.

c. A contractor or subcontractor does not violate this section if a public body awarding a contract does not determine the prevailing wage rates, and specify the rates in the contract as provided by Section 2258.022.

d. The public body shall use any money collected under this section to offset the costs incurred in the administration of this chapter.

e. A municipality is entitled to collect a penalty under this section only if the municipality has a population of more than 10,000.

2258.051. Duty of Public Body to Hear Complaints and Withhold Payment

A public body awarding a contract, and an agent or officer of the public body, shall:

1. take cognizance of complaints of all violations of this chapter committed in the execution of the contract; and
2. withhold money forfeited or required to be withheld under this Chapter from the payments to the Contractor under the contract, except that the public body may not withhold money from other than the final payment without determination by the public body that there is good cause to believe that the Contractor has violated this chapter.

Applicable wage rates to be used in Williamson and/or Travis County may be obtained from the U.S. Department of Labor website at the following web addresses:

Construction Types: Heavy (Sewer/Water Treating Plant and Sewer/Incidental to Highway)
http://www.wdol.gov/wdol/scafiles/davisbacon/TX33.dvb?v=0

Construction Types: Heavy and Highway
http://www.wdol.gov/wdol/scafiles/davisbacon/TX16.dvb?v=0

Construction Type: Building
http://www.wdol.gov/wdol/scafiles/davisbacon/TX76.dvb?v=1

02-04 LIMIT OF FINANCIAL RESOURCES

The City has a limited amount of financial resources committed to this Project; therefore, it shall be understood by all bidders that the City may be required to change and/or delete any items which it may feel is necessary to accomplish all or part of the scope of work within its limit of financial resources. Contractor shall be entitled to no claim for damages or anticipated profits on any portion of work that may be omitted. At any time during the duration of this contract, the City reserves the right to omit any work from this contract. Unit prices for all items previously approved in this contract shall be used to delete or add work per change order.

02-05 CONSTRUCTION REVIEW

The City shall provide a project representative to review the quality of materials and workmanship.

02-06 LIMITS OF WORK AND PAYMENT

It shall be the obligation of the Contractor to complete all work included in this Contract, so authorized by the City, as described in the contract documents and technical specifications. All items of work not specifically paid for in the bid proposal

shall be included in the unit price bids. Any question arising as to the limits of work shall be left up to the interpretation of the Engineer.

02-07 LAND FOR WORK

Owner provides, as indicated on Drawings, land upon which work is to be done, right-of-way for access to same and such other lands that are designated for the use of the Contractor. Contractor provides, at his expense and without liability of Owner, any additional land and access thereto that may be required for his construction operations, temporary construction facilities, or for storage of materials.

02-08 DEVIATIONS OCCASIONED BY UTILITY STRUCTURES

Whenever existing utilities, not indicated on Plans, present obstructions to grade and alignment of proposed improvements immediately notify engineer, who without delay, will determine if existing utilities are to be relocated, or grade and alignment of proposed improvements changed. Where necessary to move existing utilities and appurtenances as determined by the Engineer, the Engineer and Contractor will make relocation arrangements with the utility owner. The Owner will not be liable for delay costs or damages due to relocations of utilities which hinder progress of the work.

02-09 CONSTRUCTION STAKING

All construction staking required to complete the work associated with this contract shall be provided by the Contractor. The Contractor shall be responsible for determining the layout and extent of staking necessary to construct the improvements to the lines and grades shown in the Plans and such staking shall be satisfactory to the Engineer. The Contractor shall consult with the Engineer and Owners representative in the field for assistance as necessary. Sufficient staking materials and equipment shall be provided by the Contractor including but not limited to: paint, flagging, laths, hubs, blue tops, nails, hammers, measuring chains or tapes, transits and levels. The Contractor shall be responsible for setting and marking control and off-set points for measuring distances and angles, for shooting levels, and for any other items pertaining to construction staking. This item shall not be paid for separately and shall be considered subsidiary to other bid items.

SECTION 03-ACCESS AND TRAFFIC CONTROL

Access shall be provided for the public and emergency vehicles at all possible times. When it becomes necessary to restrict access, the Contractor shall notify the Owner and coordinate with the Owner, all applicable agencies (i.e. Fire Department, E.M.S., Public Works, etc.), residents, and affected parties. If emergency access is required during the work and such access is being hindered by the work, the Contractor will suspend the work if necessary, and otherwise endeavor to assist emergency personnel in accessing a location restricted by the work. Unless otherwise approved by the Engineer, at the end of each day all lanes of traffic shall be opened to the public. The Contractor shall ensure compliance at all times with the accepted Traffic Control Plan for the project and shall be responsible for all maintenance, signing and safety precautions necessary for traffic control. These items shall be included in the bid item Traffic Control.

01000 TECHNICAL SPECIFICATIONS

ITEM 1 GENERAL DESCRIPTION

1.01 SCOPE OF WORK

The Work covered by these Specifications consists of furnishing all labor, equipment, appliances, materials and performing all operations in connection with the inspection and testing, complete in accordance with the Plans, and subject to the terms and conditions of the Contract Documents.

1.02 GOVERNING TECHNICAL SPECIFICATIONS

STREET, WATER, SEWER AND DRAINAGE IMPROVEMENTS

The Round Rock Standard Specification Criteria Manual is hereby referred to and included in this contract as fully and to the same extent as if copied at length herein, and shall be applied to this project unless modified elsewhere as discussed below. The aforementioned Criteria Manual is the "Standard Specifications" section of the City of Round Rock Design and Construction Standards. The Standard Specifications may be accessed from the City of Round Rock website (www.roundrocktexas.gov) at the following web address: www.roundrocktexas.gov/dacs.

Any adjustments, alterations, or additional information regarding Governing Technical Specifications are contained in the Plans (Drawings), Details and Notes described in Section 02000 of the Project Manual or are included in Attachment A at the end of this Technical Specifications Section.

ITEM 2 CONTROL OF WORK

2.01 CLEAN-UP

2.01.1 CONSTRUCTION SITE

During construction the Contractor shall keep the site free and clean from all rubbish and debris and shall clean-up the site promptly when notified to do so by the Engineer.

The Contractor shall, at his own expense, maintain the streets and roads free from dust, mud, excess earth or debris which constitutes a nuisance or danger to the public using the thoroughfare, or the occupants of adjacent properties.

Care shall be taken to prevent spillage on streets and roads over which hauling is done, and any such spillage or debris deposited on streets, due to the Contractor's operations, shall be immediately removed.

2.01.2 BACKWORK

The Contractor shall coordinate his operations in such a manner as to prevent the amount of clean-up and completion of back works from becoming excessive. Should such a condition exist, the Engineer may order all or portions of the work to cease and refuse to allow any work to commence until the back work is done to the Engineer's satisfaction.

2.02 GRADING

The Contractor shall do such grading in and adjacent to the construction area associated with this contract as may be necessary to leave such areas in a neat and satisfactory condition approved by the Engineer.

ITEM 3 EXAMINATION AND REVIEW

3.01 EXAMINATION OF WORK

The work covered under this Contract shall be examined and reviewed by the Engineer, representatives of all governmental entities which have jurisdiction, and the City's authorized representative. The quality of material and the quality of installation of the improvements shall be to the satisfaction of the Engineer. It shall be the Contractor's responsibility for the construction methods and safety precautions in the undertaking of this Contract.

3.02 NOTIFICATION

The Engineer and City must be notified a minimum of 24-hours in advance of beginning construction, testing, or requiring presence of the Engineer, project representative, or City's representative.

3.03 CONSTRUCTION STAKING

The Engineer shall furnish the Contractor reference points and benchmarks that, in the Engineer's opinion, provide sufficient information for the Contractor to perform construction staking.

3.04 PROTECTION OF STAKES, MARKS, ETC.

All engineering and surveyor's stakes, marks, property comers, etc., shall be carefully preserved by the Contractor, and in case of destruction or removal during the course of this project, such stakes, marks, property comers, etc., shall be replaced by the Contractor at the Contractor's sole expense.

ITEM 4 PROTECTION AND PRECAUTION

4.01 WORK IN FREEZING WEATHER

Portions of the work may continue as directed by the Engineer.

4.02 PROTECTION OF TREES, PLANTS AND SHRUBS

The Contractor shall take necessary precautions to preserve all existing trees, plants and shrubs but where it is justifiable and necessary the Contractor may remove trees and plants for construction right-of-way but only with approval of the Engineer.

4.03 TRAFFIC CONTROL MEASURES AND BARRICADES

Traffic control measures and barricades shall be installed in accordance with the **Texas Manual of Uniform Traffic Control Devices** and in other locations deemed necessary by the Engineer, for the protection life and property. Under no circumstances will any existing road be permitted to remain closed over a weekend. No separate pay will be made for this item. Costs for this item shall be subsidiary to other items of work.

4.04 PROPERTY LINES AND MONUMENTS

The Contractor shall be responsible for the protection, reference and resetting of property comer monuments if disturbed.

4.05 DISPOSAL OF SURPLUS MATERIAL

The Contractor shall at his own expense, make arrangement for the disposal of surplus material, such as rock, trees, brush and other unwanted backfill materials.

4.06 CONTRACTOR'S USE OF PREMISES

The Contractor shall, at his own expense, provide additional space as necessary for his operations and storage of materials.

ITEM 5 MATERIALS

5.01 TRADE NAMES

Except as specified otherwise, wherever in the specifications an article or class of material is designated by a trade name or by the name or catalog number of any maker, patentee, manufacturer, or dealer, such designations shall be taken as intending to mean and specify the articles described or another equal thereto in quality, finish, and serviceability for the purpose intended, as may be determined and judged by the Engineer in his sole discretion.

5.02 MATERIALS AND WORKMANSHIP

No material which has been used by the Contractor for any temporary purpose whatever is to be incorporated in the permanent structure without the written consent of the Engineer. Where materials or equipment are specified by a trade or brand name, it is not the intention of the City to discriminate against an equal product of another manufacturer, but rather to set a definite standard of quality for performance, and to

establish an equal basis for the evaluation of bids. Where the words "equivalent", "proper" or "equal to" are used, they shall be understood to mean that the item referred to shall be "proper", the "equivalent" of, or "equal to" some other item, in the opinion or judgment of the Engineer. Unless otherwise specified, all materials shall be the best of their respective kinds and shall be in all cases fully equal to approved samples. Notwithstanding that the words "or equal to" or other such expressions may be used in the specifications in connection with a material, manufactured article or process, the material, article or process specifically designated shall be used, unless a substitute is approved in writing by the Engineer, and the Engineer will have the right to require the use of such specifically designated material, article or process.

ATTACHMENT A
To
01000 TECHNICAL SPECIFICATIONS
For
Greenlawn Storm Drainage Improvements

The additions and/or modifications to the governing technical specifications shown below (pages 1 thru 4) are hereby approved for the above referenced project:

Daniel Lynn Halden
8/12/16

The following pertains to Bid Item AA3-1 in Add Alternate No. 3 on the Bid Form that, if selected by the Owner, would add a color to the concrete used for the "Concrete-Lined Channel" in item 2 of the Base Bid:

Add Butterfield Color Uni-Mix Integral Concrete Colorant, or approved equal, to concrete in proportion required to obtain Santa Fe Buff color, or approved similar color, and mix according to manufacturer's instructions; the Contractor may submit an alternate color to the Owner for approval but in absence of said approval the color shall be as aforementioned. Maintain mix characteristics for all concrete having matching finish. Concrete shall contain a minimum of five sacks of cement per cubic yard and have a maximum slump of 4 inches. Do not use calcium chloride. Place and finish concrete according to industry standards. Cure and seal concrete with 2 coats Butterfield Color Clear Guard Cure and Seal with slip-resistive additive, or approved equal, according to manufacturer's instructions; if concrete stamping is selected by the Owner (see item for stamping below), curing and sealing shall be provided following stamping.

This item will be measured and paid for by the square yard of surface area (bottom and sides) of the Concrete-Lined Channel where the colorant is visible. The unit price shall include full compensation for furnishing all materials, labor, tools, equipment and incidentals necessary to provide a properly mixed, placed, finished, and cured and sealed colored concrete.

The following pertains to Bid Item AA4-1 in Add Alternate No. 4 on the Bid Form that, if selected by the Owner, would provide stamping of the horizontal bottom surface of the "Concrete-Lined Channel" in item 2 of the Base Bid:

Apply Butterfield Color Perma-Cast Antiquing Release Agent, or approved equal, according to manufacturer's instructions using Storm Gray color, or approved similar color, and imprint using Butterfield Color Stamping Tools using Fieldstone pattern, or

approved similar tools and pattern, according to manufacturer's instructions.

This item will be measured and paid for by the square yard of bottom surface area of the Concrete-Lined Channel where stamping is provided. The unit price shall include full compensation for furnishing all materials, labor, tools, equipment and incidentals necessary to provide a properly stamped concrete surface.

ITEM NO. 315
MILLING ASPHALTIC CONCRETE PAVEMENT AND NON-PORTLAND CEMENT CONCRETE BASES

Delete the title of this item in its entirety and replace with the following:

MILLING FOR ASPHALTIC CONCRETE PAVEMENT

Delete the first sentence under Section 315.1 "Description" in its entirety and replace with the following:

This item shall govern for the planing or the planing and texturing of existing asphaltic concrete pavement, asphalt stabilized base, and other bases encountered to depths indicated at the locations indicated on the Drawings or as directed by the Engineer or designated representative.

Delete the first sentence under Subsection B "Surface Milling" of Section 315.4 "Construction Methods" in its entirety and replace with the following:

Surface milling shall be taken to a minimum depth of 2 inches (50 mm) or deeper as may be dictated by delamination of asphalt layers during the milling operation. In roadway areas containing medians, surface milling shall be performed for the entire roadway surface and shall extend beyond the ends of the median as necessary to provide for a proper and smooth subsequent overlay transition between areas with medians and those without, subject to the approval of the Engineer. Surface milling on each side of a median shall be full depth at the higher lip of gutter transitioning to ¼ inch less than the full depth at the lower lip of gutter. Where the proposed overlay area abuts existing asphaltic concrete pavement to remain, Surface Milling as approved by the Engineer shall also be provided transversely across the roadway as necessary to provide for a proper and smooth subsequent overlay transition from the new overlay area to the existing pavement to remain; the full mill depth shall be provided at the interface between the new overlay area and the existing pavement to remain, and tapering shall be provided as necessary from the interface toward the proposed overlay area.

Delete the first sentence under Section 315.7 "Payment" in its entirety and replace with the following:

The work performed in accordance with this item and measured as provided under "Measurement", will be paid for at the unit price bid per square yard for "Milling Asphaltic Concrete Paving".

Add the following at the end of Section 315.7 "Payment":

Surface/Edge Milling *Per Square Yard*

ITEM NO. 340
HOT MIX ASPHALTIC CONCRETE PAVEMENT

RAP (but NOT RAS) will be allowed in a Hot Mix Asphaltic Concrete Pavement (HMAC) Type D surface course. If the Contractor chooses to use RAP in a HMAC Type D surface course, the governing technical specifications for said HMAC Type D shall be amended by the specifications included at the end of this "Attachment A" titled "SP340 Dense-Graded Hot-Mix Asphalt (QC/QA)" pages 1 through 6. The Contractor shall be responsible for ensuring that HMAC provided and placed is not a comingled mixture of HMAC material of two or more Job Mix Formulae (JMF). Furthermore, unless approved by the City, the Contractor shall not alternate between two or more JMF during surface course pavement placement and the Contractor shall place surface course HMAC consisting of only one Job Mix Formula (JMF) for the limits of a roadway.

Add the following at the end of Section 340.14 "Payment":

Where a bid item is measured by the ton of HMAC placed, the Contractor shall provide documentation (i.e. daily run tickets) to the Owner to verify tonnage of HMAC placed in conjunction with any application for payment for such bid item.

ITEM NO. 803
BARRICADES, SIGNS AND TRAFFIC HANDLING

Delete the two paragraphs under Subsection B "Barricades, Signs and Traffic Handling" of Section 803.6 "Measurement" in their entirety and replace with the following:

All work performed and material furnished as prescribed by this item, City of Round Rock Standard Details, details shown on the Drawings or indicated in the TMUTCD, that are not included in the above paragraph, shall be measured by the Lump Sum.

Traffic control for the contract will be measured once per bid item listed in the Bid Form for "Barricades, Signs and Traffic Handling", regardless of the number of set-ups performed.

Add the following to the second paragraph under Section 803.7 Payment:

Barricades, Signs, and Traffic Handling *Per Lump Sum*

Add the following at the end of Section 803.7 Payment:

The Contractor may request payments of portions of the Lump Sum for Barricades, Signs and Traffic Handling shown on the Bid Form under the Base Bid as follows: an application for payment may indicate a percentage for payment of the Lump Sum for

this item equal to 0.9 of the percentage of completion of curb inlets, junction boxes, and pipe in Greenlawn Boulevard as determined by the amount on the application for payment for said curb inlets, junction boxes, and pipe relative to the total combined amounts for the curb inlets, junction boxes, and pipe as calculated from the Bid Form. For example, if the total combined amounts for curb inlets, junction boxes, and pipe in Greenlawn Boulevard shown in the Bid Form is $70,000 and an approved application for payment accounts for $35,000 for the curb inlets, junction boxes, and pipe, then the application for payment may indicate a percentage of the Lump Sum for Barricades, Signs and Traffic Handling for payment of 45% (35,000/70,000 x 100% x 0.9). Upon completion of all curb inlets, junction boxes, pipe, curb and gutter, and sidewalk in Greenlawn Boulevard, an application for payment may indicate a percentage for payment of the Lump Sum equal to 95%; the remaining 5% of this item may be included in the final application for payment. Upon final payment, no more or no less than 100% of the total amount for this item shown in the Base Bid of the Bid Form will have been paid by the Owner.

The Contractor may request payments of portions of the Lump Sum for Barricades, Signs and Traffic Handling shown on the Bid Form under Add Alternate No.1 as follows: an application for payment may indicate a percentage for payment of the Lump Sum for this item of 40% upon completion of Surface/Edge Milling for Asphaltic Concrete Pavement; 80% upon completion of Hot Mix Asphaltic Concrete Pavement - 2" Type D (Overlay); and 95% upon completion of Pavement Markings; the remaining 5% of this item may be included in the final application for payment. Upon final payment, no more or no less than 100% of the total amount shown for this item in the Alternate Bid No. 1 of the Bid Form for will have been paid by the Owner if Alternate Bid No. 1 has been selected by the Owner.

ITEM NO. 861
THERMOPLASTIC PAVEMENT MARKINGS

Delete the paragraph under Section 861.7 "Measurement" in its entirety and replace with the following:

Measurement of the markings shall be by the linear feet of 4" wide stripe that equates to the surface area covered by the lines, shapes, words and symbols provided, regardless of color.

Delete the first sentence under Section 861.8 "Payment" in its entirety and replace with the following:

The work performed and materials furnished as prescribed by this item, measured as provided under "Measurement", shall be paid for at the unit price bid per linear foot, regardless of color, complete in place.

SP340 Dense-Graded Hot-Mix Asphalt (QC/QA)

Item No. 340 "Hot Mix Asphaltic Concrete Pavement" of the governing technical specifications is amended to include all of the clauses and provisions cited below, and no other clauses or requirements of Item No. 340 are waived or changed hereby.

The following language under **Article 340.3 Materials**:

> "A. Aggregate: The aggregate shall be composed of coarse aggregate, a fine aggregate and, if required or allowed, mineral filler and reclaimed asphalt pavement (RAP). RAP use will be allowed in all base course mixtures except as specifically excluded herein, in the Contract Documents or on the Drawings, provided no more than 20% RAP is used.
>
> RAP use will not be permitted in pavement surface courses.
>
> Aggregates shall meet the quality requirements of Table 1 and other requirements as specified herein. The aggregate contained in RAP will not be required to meet Table 1 requirements unless indicated otherwise on the Drawings."

is voided and replaced by the following:

A. Aggregate: Furnish aggregates from sources that conform to the requirements shown in Table 1 and as specified in this Section. Aggregate requirements in this Section, including those shown in Table 1, may be modified or eliminated when shown on the plans. Additional aggregate requirements may be specified when shown on the plans. Provide aggregate stockpiles that meet the definition in this Section for either a coarse aggregate or fine aggregate. Aggregate from reclaimed asphalt pavement (RAP) is not required to meet Table 1 requirements unless otherwise shown on the plans. Supply mechanically crushed gravel or stone aggregates that meet the definitions in Tex-100-E. The Engineer will designate the plant or quarry as the sampling location. Samples must be from materials produced for the project. The Contractor must provide data for the supplier's testing values for the Los Angeles abrasion and magnesium sulfate soundness. The Contractor shall perform all other aggregate quality tests listed in Table 1. Document all test results on the mixture design report. The Engineer may perform tests on independent or split samples to verify Contractor test results. Stockpile aggregates for each source and type separately. Determine aggregate gradations for mixture design and production testing based on the washed sieve analysis given in Tex-2-F, Part II. Do not add material to an approved stockpile from sources that do not meet the stated aggregate quality requirements unless otherwise approved.

Article 340.3 Materials, Section A. 2. is voided and replaced by the following:

2. Reclaimed Asphalt Pavement (RAP): RAP is defined as a salvaged, milled, pulverized, broken or crushed asphalt pavement. Crush or break RAP so that 100% of the particles pass the 2-inch sieve.

Use of Contractor, City of Round Rock, or hot-mix asphaltic concrete manufacturer-owned RAP including hot-mix asphalt (HMA) plant waste is permitted, unless otherwise shown on the plans. The Contractor shall perform any necessary tests to ensure RAP is appropriate for use. When shown on the plans, the Contractor will retain ownership of RAP generated on the project.

Fractionated RAP is defined as having two or more RAP stockpiles, whereby the RAP is divided into coarse and fine fractions. The coarse RAP stockpile will contain only material

retained by processing over a 3/8-inch sieve or 1/2-inch sieve, unless otherwise approved. The fine RAP stockpile will contain only material passing the 3/8-inch sieve or 1/2-inch sieve, unless otherwise approved. The Engineer may allow the Contractor to use an alternate to the 3/8-inch sieve or 1/2-inch sieve to fractionate the RAP. The maximum percentages of fractionated RAP may be comprised of coarse or fine fractionated RAP or the combination of both coarse and fine fractionated RAP. Utilize a separate cold feed bin for each stockpile of fractionated RAP used.

Determine asphalt content and gradation of RAP stockpiles for mixture design purposes in accordance with Tex-236-F. Perform other tests on RAP when shown on the plans. Do not exceed the maximum allowable percentages of RAP shown in Table 1A. Asphalt binder from RAP and Recycled Asphalt Shingles (RAS) is designated as recycled asphalt binder. When RAP or RAS is used, calculate and ensure that the ratio of the recycled asphalt binder to total binder does not exceed the percentages shown in Table 1A. The allowable percentages shown in Table 1A may be decreased or increased when shown on the plans. Do not use RAP and/or RAS contaminated with dirt or other objectionable materials. Do not use RAP if the decantation value exceeds 5% and the plasticity index is greater than 8. Test the stockpiled RAP for decantation in accordance with Tex-406-A, Part I. Determine the plasticity index in accordance with Tex-106-E if the decantation value exceeds 5%. The decantation and plasticity index requirements do not apply to RAP samples with asphalt removed by extraction.

Do not intermingle RAP stockpiles. Remove Contractor-owned RAP material from the project site upon completion of the project. Return unused City of Round Rock-owned RAP to the designated stockpile location if applicable.

The Contractor shall be solely responsible for determining the suitability, quality, and appropriate use of RAP in the HMA and the City of Round Rock shall not be liable for any HMA deficiencies caused by the inclusion of RAP.

Table 1A
Maximum Allowable Amounts of Recycled Binder, RAP & RAS

Mixture Description & Location	Maximum Ratio of Recycled Binder[1] to Total Binder (%)	Maximum Allowable % (Percentage by Weight of Total Mixture)		
		Unfractionated RAP[2]	Fractionated RAP[3]	RAS[4]
Surface Mixes[5]	35	10	20	5
Non-Surface Mixes[6] < 8 in. From Final Riding Surface	40	15	30	5
Non-Surface Mixes[6] > 8 in. From Final Riding Surface	45	20	40	5

1. Combined recycled binder from RAP and RAS.
2. Do not use in combination with RAS or fractionated RAP.
3. May not be used in addition to unfractionated RAP; however, up to 5% of fractionated RAP may be replaced with RAS.
4. May be used separately or as a replacement for no more than 5% of the allowable fractionated RAP.
5. "Surface" mixes are defined as mixtures that will be the final lift or riding surface of the pavement structure.
6. "Non-Surface" mixes are defined as mixtures that will be an intermediate or base layer in the pavement structure.

Article 340.3 Materials, Section A. is supplemented by inserting the following after subsection **3.**:

4. Recycled Asphalt Shingles (RAS): Use of post-manufactured RAS or post-consumer RAS is permitted unless otherwise shown on the plans. RAS are defined as processed asphalt shingle material from manufacturing of asphalt roofing shingles or from re-roofing residential structures. "Post-manufactured RAS" are processed manufacturer's shingle scrap by-product. "Post-consumer RAS", or "tear-offs", are processed shingle scrap removed from residential structures. Comply with all regulatory requirements stipulated for RAS by the Texas Commission on Environmental Quality (TCEQ). RAS may be used separately or in conjunction with RAP.

Process the RAS by ambient grinding or granulating such that 100% of the particles pass the 1/2-inch sieve and 90% pass the 3/8-inch sieve when tested in accordance with Tex-200-F, Part I. If needed, RAP passing the 1/2-inch sieve or sand approved by the Engineer and in conformance with the gradation requirements shown in the table in Article 340.3 Materials, Section A. 3. may be added to RAS stockpiles to keep the processed material workable. Perform a sieve analysis on processed RAS material prior to extraction of the asphalt.

Determine asphalt content and gradation of the RAS material for mixture design purposes in accordance with Tex-236-F. Do not exceed the maximum allowable percentages of RAS shown in Table 1A. Asphalt binder from RAS and RAP is designated as recycled asphalt binder. When RAS or RAP is used, calculate and ensure that the ratio of the recycled asphalt binder to total binder does not exceed the percentages shown in Table 1A. The allowable percentages shown in Table 1A may be decrease or increased when shown on the plans.

Certify compliance of the RAS with DMS-11000, "Evaluating and Using Nonhazardous Recyclable Materials (NRM) Guidelines". If the RAS has not come into contact with any hazardous materials, treat it as an established NRM. Unless otherwise directed, use only RAS from sources as approved by the City of Round Rock. Prior to use, remove all materials that are not part of the shingle, such as wood, paper, metal, and plastics. Do not use RAS if deleterious materials as measured by Tex-217-F, Part I are more than 1.5% of the stockpiled RAS.

The Contractor shall be solely responsible for determining the suitability, quality, and appropriate use of RAS in the HMA and the City of Round Rock shall not be liable for any HMA deficiencies caused by the inclusion of RAS.

Article 340.3 Materials, Section A. 4. is changed to **Article 340.3 Materials, Section A. 5.** due to the insertion of **4.** as provided for herein.

Article 340.3 Materials, Section B. is supplemented by adding the following at the end of the section:

Furnish the type and grade of performance-graded (PG) asphalt specified on the plans. Unless otherwise shown on the plans, the Contractor may use a substitute PG binder listed in Table 3A in lieu of the PG binder originally specified, if the substitute PG binder and mixture made with the substitute PG binder meet the following:

- the substitute binder meets the specification requirements for the substitute binder grade in accordance with Section 300.2.J, "Performance-Graded Binders";
- the substitute binder has an un-aged dynamic shear value less than or equal to 2.00 kPa and an RTFO aged dynamic shear value less than or equal to 5.00 kPa at the PG test temperature; and

- the mixture has less than 10.0 mm of rutting on the Hamburg Wheel test (Tex-242-F) after the number of passes required for the originally specified binder. Use of substitute PG binders may only be allowed at the discretion of the Engineer if the Hamburg Wheel test results are between 10.0 mm and 12.5 mm.

Table 3A
Allowable Substitute PG Binders

Description of Course Function	PG Binder Originally Specified	Allowable Substitute PG Binders
Final Surfaces	PG 76-22S	PG 70-22 or PG 64-22
All Other Layers	PG 64-22	PG 58-22

Article 340.4 Paving Mixtures, Section D. is supplemented by adding the following at the end of the section:

Use an approved laboratory to perform the Hamburg Wheel test and provide results with the mixture design.

Laboratory Mixture Design Properties

Mixture Property	Test Method	Requirement
Target Laboratory-Molded Density, %	Tex-207-F	96.0
Tensile Strength (dry), psi (molded to 93% ± 1% density)	Tex-226-F	85-200[1]
Boil Test[2]	Tex-530-C	-
Hamburg Wheel Test Requirements		
High-Temperature Binder Grade	**Test Method**	**Minimum # of Passes @ 0.5" Rut Depth, Tested @ 122° F**
PG 64 or lower	Tex-242-F	10,000
PG 70		15,000
PG 76 or higher		20,000

1. May exceed 200 psi when approved and may be waived when approved.
2. Used to establish baseline for comparison to production results. May be waived when approved.

Article 340.4. Paving Mixtures, Section E. is amended by voiding the second paragraph and replacing with the following:

If it is determined by the City of Round Rock that adjustments to the JMF are necessary to achieve the specified requirements, the Engineer or designated representative may allow adjustments to the JMF within the following limits without a laboratory redesign of the mixture. The following table shows the Operational Tolerances that will be allowed. When the proposed adjustments exceed these limits, and the Engineer or designated representative determines that the impact of these changes may adversely affect pavement performance, a new laboratory mixture design will be required.

Operational Tolerances

Description	Test Method	Allowable Difference from Current JMF Target	Allowable Difference between Contractor and Engineer[1]
Individual % retained for #8 sieve and larger	Tex-200-F or Tex-236-F	± 5.0[2]	± 5.0
Individual % retained for sieves small than #8 and larger than #200		± 3.0[2]	± 3.0
% passing the #200 sieve		± 2.0[2]	± 1.6
Asphalt content, %	Tex-236-F	± 0.3[3]	± 0.3
Laboratory-molded density, %	Tex-207-F	± 1.0	± 0.5
In-Place air voids, %		N/A	± 1.0
Laboratory-molded bulk specific gravity		N/A	± 0.020
VMA, % min.		Note 4	N/A
Theoretical maximum specific (Rice) gravity	Tex-227-F	N/A	± 0.020

1. The Contractor may request referee testing only when values exceed these tolerances.
2. When within these tolerances, mixture production gradations may fall outside the master grading limits; however, the % passing the # 200 sieve will be considered out of tolerance when outside the master grading limits.
3. Tolerance between JMF 1 and JMF 2 may exceed ± 0.3%.
4. Test and verify that Table 2 requirements are met.

Article 340.10 Construction Methods, Section A. is supplemented by adding the following to the first paragraph:

On or before the first day of paving, it is mandatory to schedule and participate in a pre-paving meeting with the Engineer unless otherwise shown on the plans.

Article 340.10 Construction Methods, Section A. is supplemented by adding the following between the eighth and ninth paragraphs:

In lieu of complying with the aforementioned minimum temperature requirements, the Contractor may pave any time the roadway is dry and the roadway surface temperature is at least 32° F by using a Pave-IR system (paver mounted infrared bar) and demonstrating to the Engineer that no more than 25° F of thermal segregation exists. When used, operate the Pave-IR system in accordance with Tex-244-F and provide the Engineer with the output results on a daily basis unless otherwise directed.

Article 340.10 Construction Methods, Section D. is supplemented by adding the following at the end of the section:

a. Thermal Profile. Use an infrared thermometer or thermal camera to obtain a thermal profile on each sublot in accordance with Tex-244-F. The Engineer may allow the Contractor to reduce the testing frequency based on a satisfactory test history. The Engineer may also obtain as many thermal profiles as deemed necessary. Thermal profiles are not applicable in miscellaneous paving areas subject to hand work such as driveways, crossovers, turnouts, gores, tapers, and other similar areas.

1) Moderate Thermal Segregation. Any areas that have a maximum temperature differential greater than 25° F but not exceeding 50° F are deemed as having moderate thermal segregation. Take immediate corrective action to eliminate the moderate thermal segregation. Evaluate areas with moderate thermal segregation by performing a density profile in accordance with Section 340.11 Sampling and Testing, Segregation (Density Profile).
2) Severe Thermal Segregation. Any areas that have a maximum temperature differential greater than 50° F are deemed as having severe thermal segregation. Unless otherwise directed, suspend operations and take immediate corrective action to eliminate severe thermal segregation. Resume operations when the Engineer determines that subsequent production will meet the requirements of this Item. Evaluate areas with severe thermal segregation by performing a density profile in accordance with Section 340.11 Sampling and Testing, Segregation (Density Profile). Unless otherwise directed, remove and replace the material in any areas that have both severe thermal segregation and a failing result for Segregation (Density Profile).
3) Use of the Pave-IR System. In lieu of obtaining thermal profiles on each sublot using an infrared thermometer or thermal camera, the Contractor may use the Pave-IR system (paver mounted infrared bar) to obtain a continuous thermal profile in accordance with Tex-244-F. When using the Pave-IR system, review the output results on a daily basis and, unless otherwise directed, provide the output results to the Engineer for review. Modify the paving process as necessary to eliminate any (moderate or severe) thermal segregation identified by the Pave-IR system. The Engineer may suspend paving operations if the Contractor cannot successfully modify the paving process to eliminate thermal segregation. Density profiles in accordance with Section 340.11 Sampling and Testing, Segregation (Density Profile) are not required and are not applicable when using the Pave-IR system.

Article 340.11 Sampling and Testing is supplemented by adding the following and the end of the article:

Segregation (Density Profile): Unless otherwise determined by the Engineer or when required herein, test for segregation using density profiles in accordance with Tex-207-F, Part V. Provide the Engineer with the results of the density profiles as they are completed. Density profiles are not required and are not applicable when using the Pave-IR system. Areas defined in Section 340.12 Acceptance Plan A. 4. are not subject to density profile testing. Density profiles are not applicable in miscellaneous paving areas subject to hand work such as driveways, crossovers, turnouts, gores, tapers, and other similar areas.

The density profile is considered failing if it exceeds the tolerances shown in the Segregation (Density Profile) Acceptance Criteria Table below. When the Pave-IR system is not used, the Engineer may measure the density profile at any time, at any location, and as often as deemed necessary to verify conformance. The Engineer's density profile results will be used when available. The Engineer may require the Contractor to remove and replace the area in question if the area fails the density profile and has surface irregularities.

Segregation (Density Profile) Acceptance Criteria Table

Mixture Type	Maximum Allowable Density Range (Highest to Lowest)	Maximum Allowable Density Range (Average to Lowest)
All	6.0 pcf	3.0 pcf

END

02000 PLANS, DETAILS AND NOTES

If applicable, insert reference(s) to project plans; details; and notes

The Plans (Drawings), details and notes consist of: 19 pages under separate cover entitled "Greenlawn Storm Drainage Improvements " - as prepared by MWM Desgin Group dated August, 2016; Additional Project Notes (1 page) behind this page; Curb Inlet Details (2 pages) behind this page; and, a Re-Striping Plan (1 page) behind this page.

GREENLAWN STORM DRAINAGE IMPROVEMENTS

Additional Project Notes

1. Filling of the existing channel that is generally adjacent to the new channel from (approx.) Station 2+00 to (approx.) Station 6+00 as indicated on sheet 6 of the Drawings will not be measured and paid for separately and shall be subsidiary to the items for Channel Excavation and Concrete-Lined Channel. Said filling shall be in accordance with Item No. 132 Embankment of the governing technical specifications.
2. Soil Retention Blanket as indicated for the grass-lined channel on sheet 10 of the Drawings may be Curlex II (.98) as manufactured by American Excelsior Company, or approved equal. Alternatively, the Contractor has the option of selecting an approved soil retention blanket conforming to Class 2, Type G included in the Approved Products List published by TxDot.
3. The Concrete-Lined Channel as shown on sheet 10 of the Drawings and included in item 2 of the Base Bid of the Bid Form will be measured and paid for by the square yard of visible surface area of the channel following placement and backfill. The visible surface area will consist of the bottom width between the walls or sides and, the walls or sides from the bottom up to the top of the walls/sides chamfer.
4. Temporary Removable Pavement Markings in accordance with Item No. 862 of the governing technical specifications shall be provided by the Contractor as necessary to properly direct traffic if the Owner selects Add Alternate No. 1 (milling and overlay of Greenlawn Boulevard from Parkside Circle to Gattis School Road) as included in the Bid Form. If Add Alternate No. 1 is selected by the Owner, Temporary Removable Pavement Markings will not be measured and paid for separately and shall be subsidiary to the various bid items under Add Alternate No. 1.

Daniel Lynn Halden 8/12/16

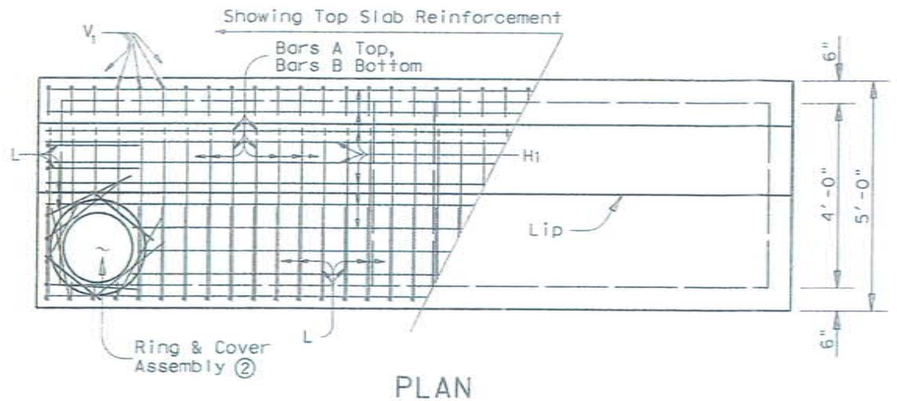

PLAN

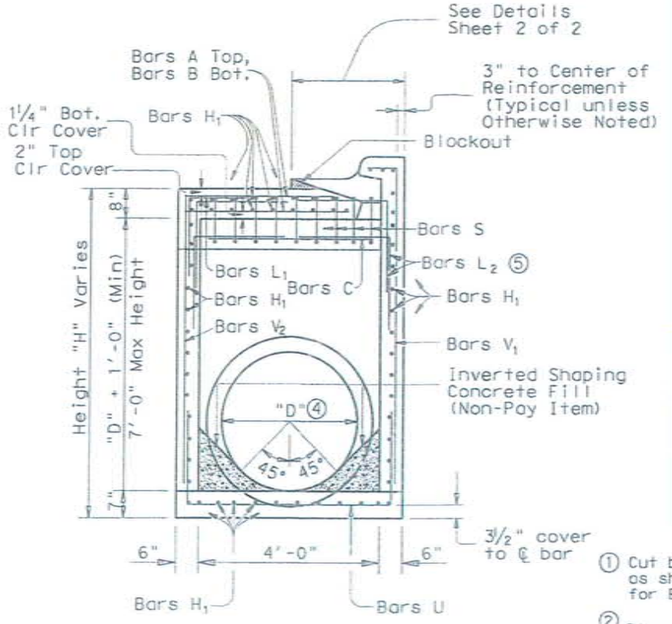

SECTION A-A

Note: This inlet detail has been selected by me as applicable for the "Greenlawn Storm Drainage Improvements" project and will be utilized if the Owner selects Add Alternate No. 2.

Daniel Lynn Halden 8/12/16

STATE OF TEXAS
DANIEL LYNN HALDEN
63225
REGISTERED
PROFESSIONAL ENGINEER

① Cut bars H_2 & V_3 as shown. Allow 3" for End Cover (Typical).

② Place bars L with Bars A, H, and V as shown at RCP, corners and Manhole Assembly. Place Manhole ring such that interior opening aligns with inside faces of two corner walls. Place 8 - #4 Bars as shown in Plan View around Ring Assembly to engage cut slab Bars A, B & H.

③ Cut bars H as Required to accommodate Pipe Recess in Bottom Slab.

④ "D" = Pipe Diameter

⑤ Alling Bars L_2 with Beam Reinforcement Bars C and Top Slab Reinforcement (12 Bars L_2 Total)

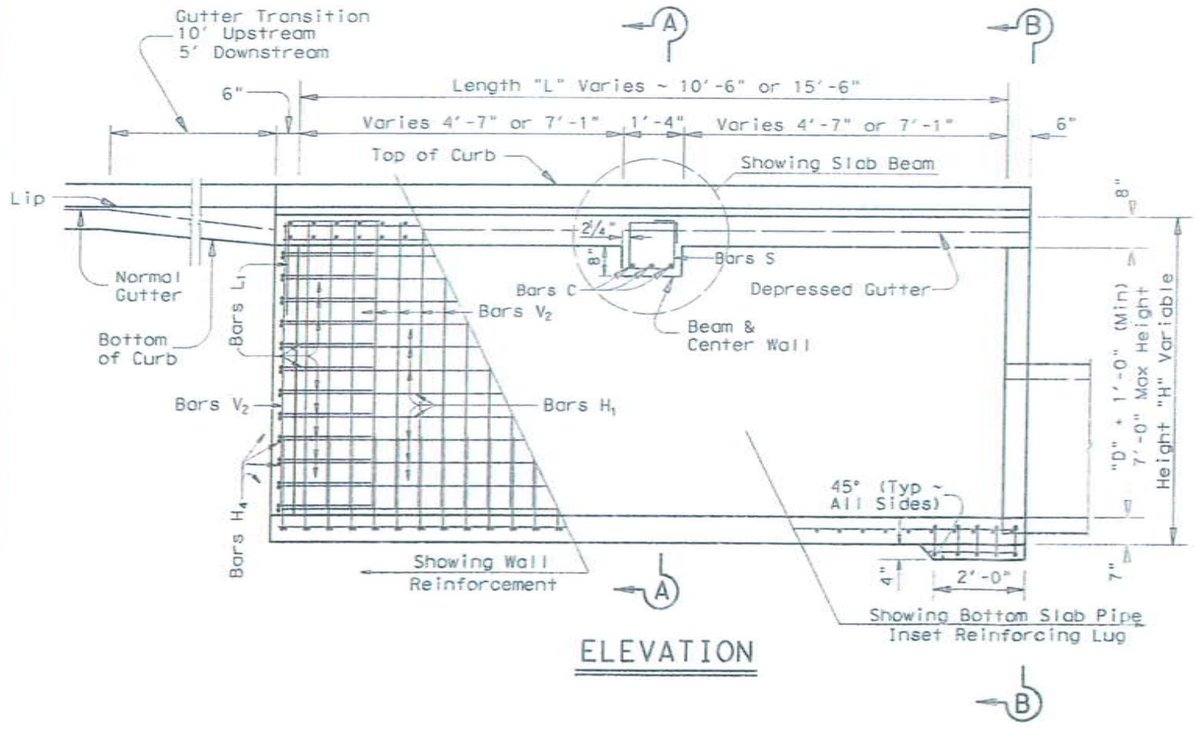

ELEVATION

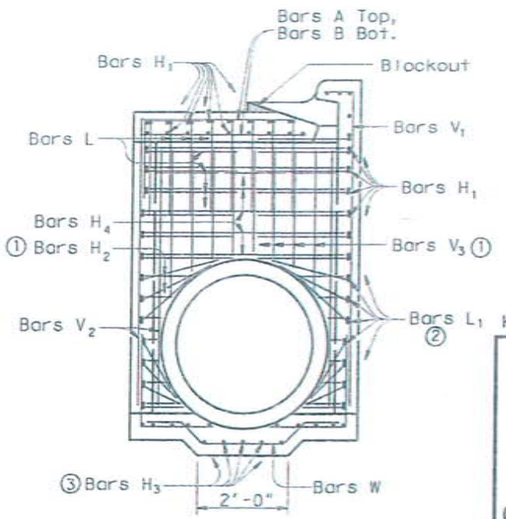

END VIEW B-B

HS20 LOADING

Sheet 1 of 2

Texas Department of Transportation
Austin District Design

CURB INLET DETAILS

TYPE IR & IIR

(FOR 36" DIA. RCP & SMALLER)

Austin District Standard

©TxDOT 2002

REVISIONS
9/04 2004 Update

...\d0137435\CI-TY1R-TY2R-A-04.dgn 2/12/2009 6:48:10 PM

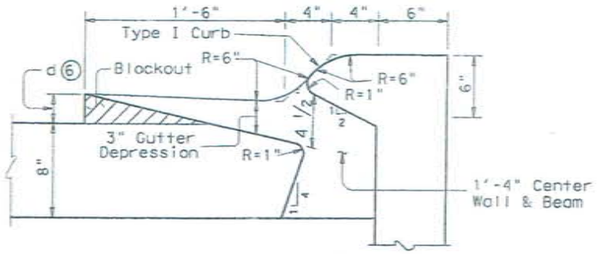

THROAT DETAILS TYPE IR INLETS

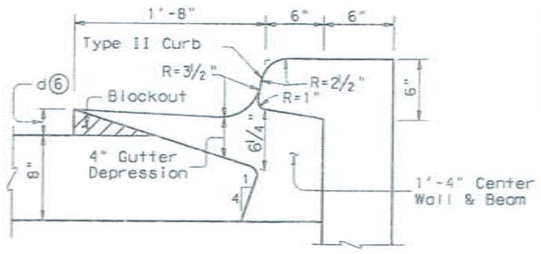

THROAT DETAILS TYPE IIR INLETS

Note: This inlet detail has been selected by me as applicable to the "Greenlawn Storm Drainage Improvements" project and will be utilized if the Owner selects Add Alternate No. 2.

STATE OF TEXAS
DANIEL LYNN HALDEN
63225
REGISTERED
PROFESSIONAL ENGINEER

8/12/16

BAR TABLE		
BAR	SIZE	MAX. SPA.
A	#5	5"
B	#5	5"
C	#8	As Shown
H_1	#5	6"
H_2	#5	6"
H_3	#5	6"
H_4	#5	6"
L_1	#5	6"
L_2	#8	As Shown
S	#4	5"
U	#5	6"
V_1	#5	6"
V_2	#5	6"
V_3	#5	6"
W	#5	6"

⑥ "d" = Depth of Overlay.

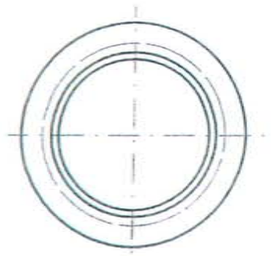

TOP VIEW

BOTTOM VIEW

RING AND COVER DETAILS

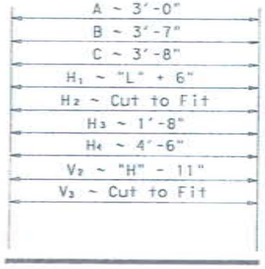

BARS A, B, C, H_1, H_2, H_3, H_4, V_2, & V_3

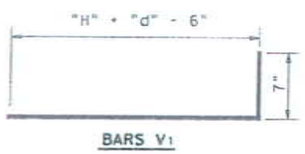

BARS V_1

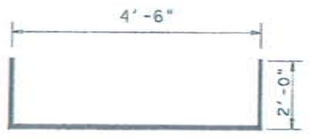

BARS U

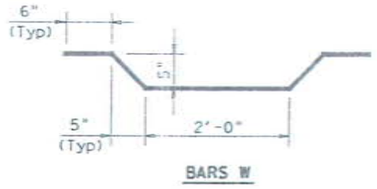

BARS W

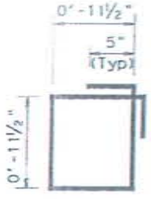

BARS S

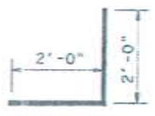

BARS L_1 & L_2

GENERAL NOTES:

Use Class "A" for all concrete.

Ring and cover must meet requirements of AASHTO M306, "Standard Specification for Drainage Structure Castings". Materials shall conform to ASTM A48, Class 35B for gray iron castings or ASTM A536, Grade 65-45-12 for ductile iron castings. Aluminum alloy castings will not be permitted. Consider ring and cover subsidiary to the pertinent Item.

If two inlets are to be installed end to end, install equivalent opening or pipe segment in end walls between boxes. Each end wall between inlet boxes will be reinforced as shown for single box.

Build inlets in stages so that base laying operations may be continuous over the top of the inlet. Backfill any additional excavation required below finished base grade within roadway limits with Class "B" Conc (Riprap).

Consider work or materials involved for inlet stage construction subsidiary to the pertinent Items.

Where inlets are proposed at existing inlet locations, utilize portions of the existing inlet in the new construction as directed. Consider all break-back necessary to provide for tie to new construction and all removal of remaining portions of existing inlet not to be utilized subsidiary to pertinent Item.

Ensure connecting pipes enter within 10 degrees of normal to inlet wall. If necessary, use pipe elbow or curved approach alignment to stay within this limit.

Provide gutter blockout(s) for the length of each inlet for temporary drainage. Fill blockout(s) after final roadway paving. Consider this work subsidiary to pertinent Item.

HS20 LOADING

Texas Department of Transportation
Austin District Design

CURB INLET DETAILS

TYPE IR & IIR

(FOR 36" DIA. RCP & SMALLER)

Austin District Standard

© TxDOT Aug. 2002

REVISIONS
9/04 2004 Update

Greenlawn Storm Drainage Improvements

Re-Striping Plan
(To be implemented if the City selects Add Alternate No. 1)

Note: Reflectorized Pavement Markers will not be measured and paid for separately and shall be subsidiary to bid item for Thermoplastic Pavement Markings.

PARKSIDE CIR

Daniel Lynn Halden 8/12/16

STATE OF TEXAS
DANIEL LYNN HALDEN
63225
REGISTERED
PROFESSIONAL ENGINEER

4" x 10' white skips @ 40' spacing with Type I-C pavement markers@ 80' spacing (typ.)

GREENLAWN BLVD

Provide words and arrows as shown

Provide 1 Type II-B-B pavement marker for fire hydrant

4" double yellow centerline with Type II-A-A pavement markers at 20' spacing

4" dotted white line (2' segments with 4' gaps)

8" white lane line with Type I-C pavement markers @20' spacing (typ.)

24" white stop bar

12" white crosswalk (typ.)

GATTIS SCHOOL RD

N

0 25 50 100 Feet