Junction Box

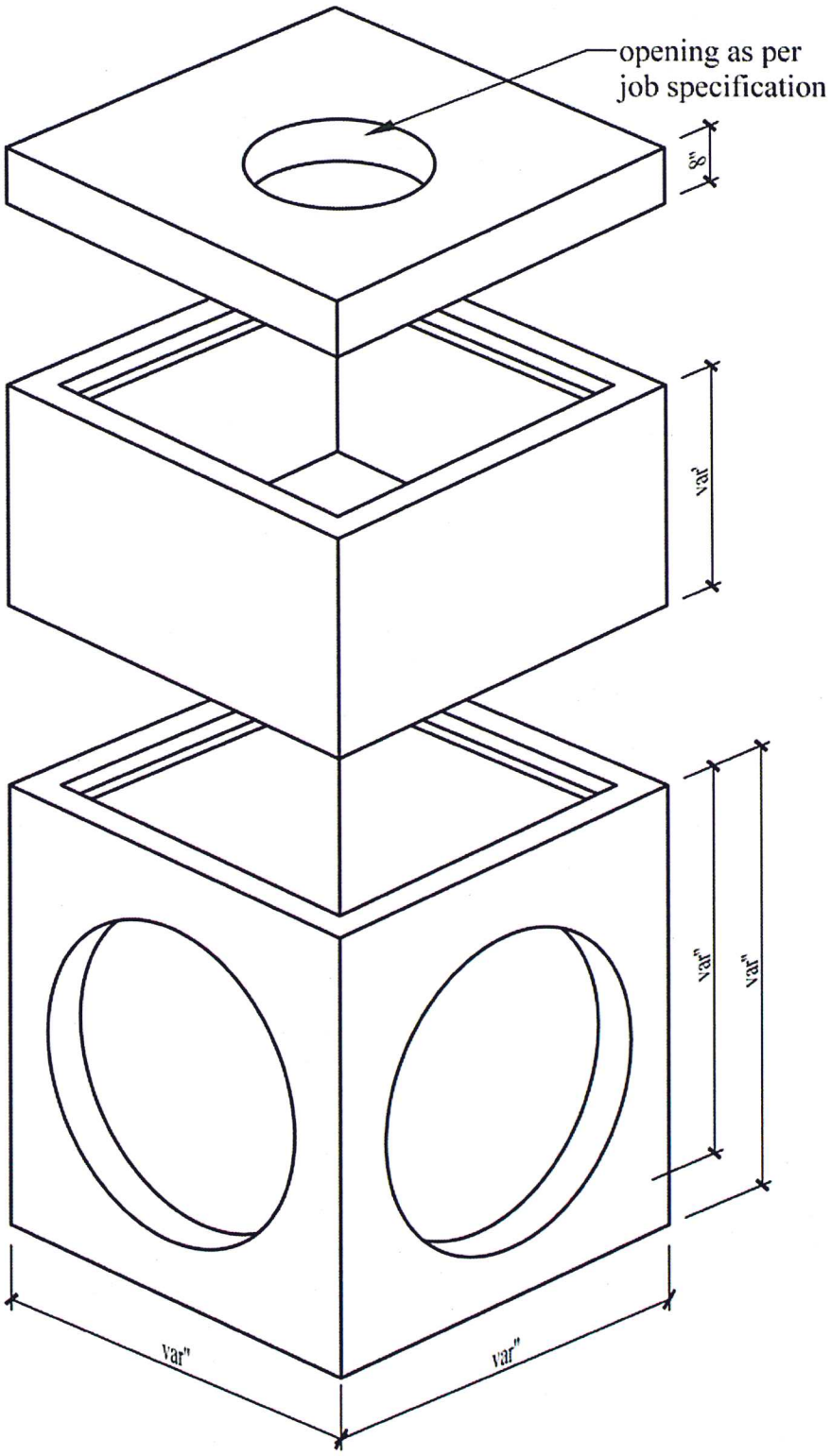

sizes available:

24" x 24"
30" x 30"
3' x 3'
4' x 4'
4' x 6.5'
4' x 8'
5' x 5'
5' x 7'
6' x 6'
6' x 8'
6' x 12'
7' x 7'
8' x 8'
10' x 10'

Capital Precast

CAPITAL PRECAST, INC.

800 WATSON LANE EAST
NEW BRAUNFELS, TEXAS 78130
PH. (830) 606-6200

FOR Junction Box			
JOB			
DRAWN RW	DATE 2/19/2009	Rev. No.	SHEET 1 OF 1
FILE f:/users/renee/brochure/websitepages/junctionbox			