RRSRL - DR- 5100

PRECAST DRAINAGE STRUCTURES

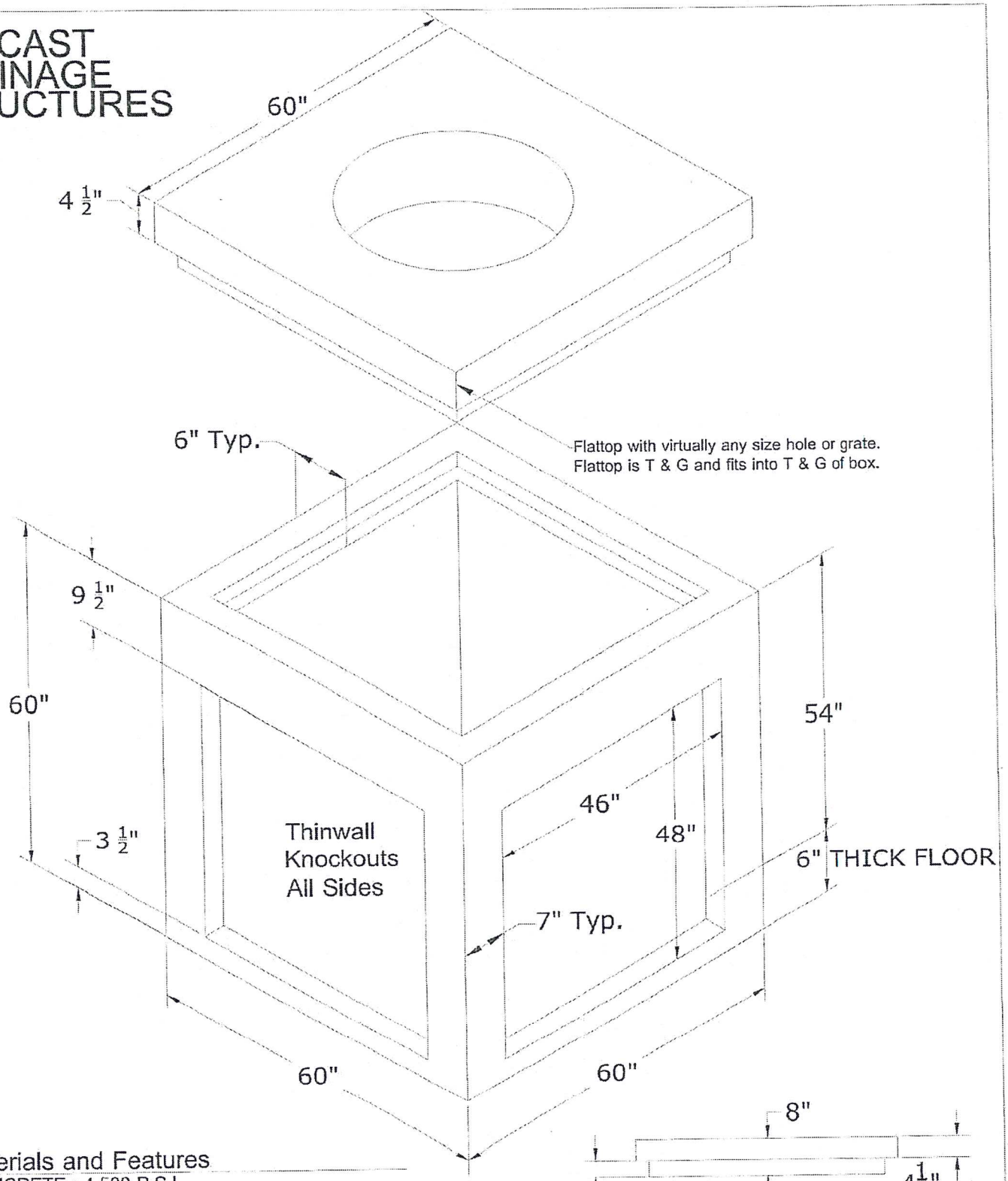

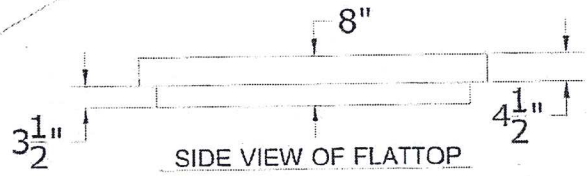

Materials and Features

CONCRETE : 4,500 P.S.I.
MEETS ASTM 913.08 STANDARD
REINFORCED TO H20 LOADING
MAXIMUM RCP : 36"
RISER SECTIONS AVAILABLE
WEIGHT : 5,775 LBS.
FLATTOP WEIGHT : 1,050 LBS. (W/ 48" HOLE)

-No Scale-
All Dimensions subject to allowable specification tolerances.

TITLE	DATE	
4' x 4' x 54" Junction Box	12-16-12	Austin Precast