RRSPL-DR-5200

PRECAST DRAINAGE STRUCTURES

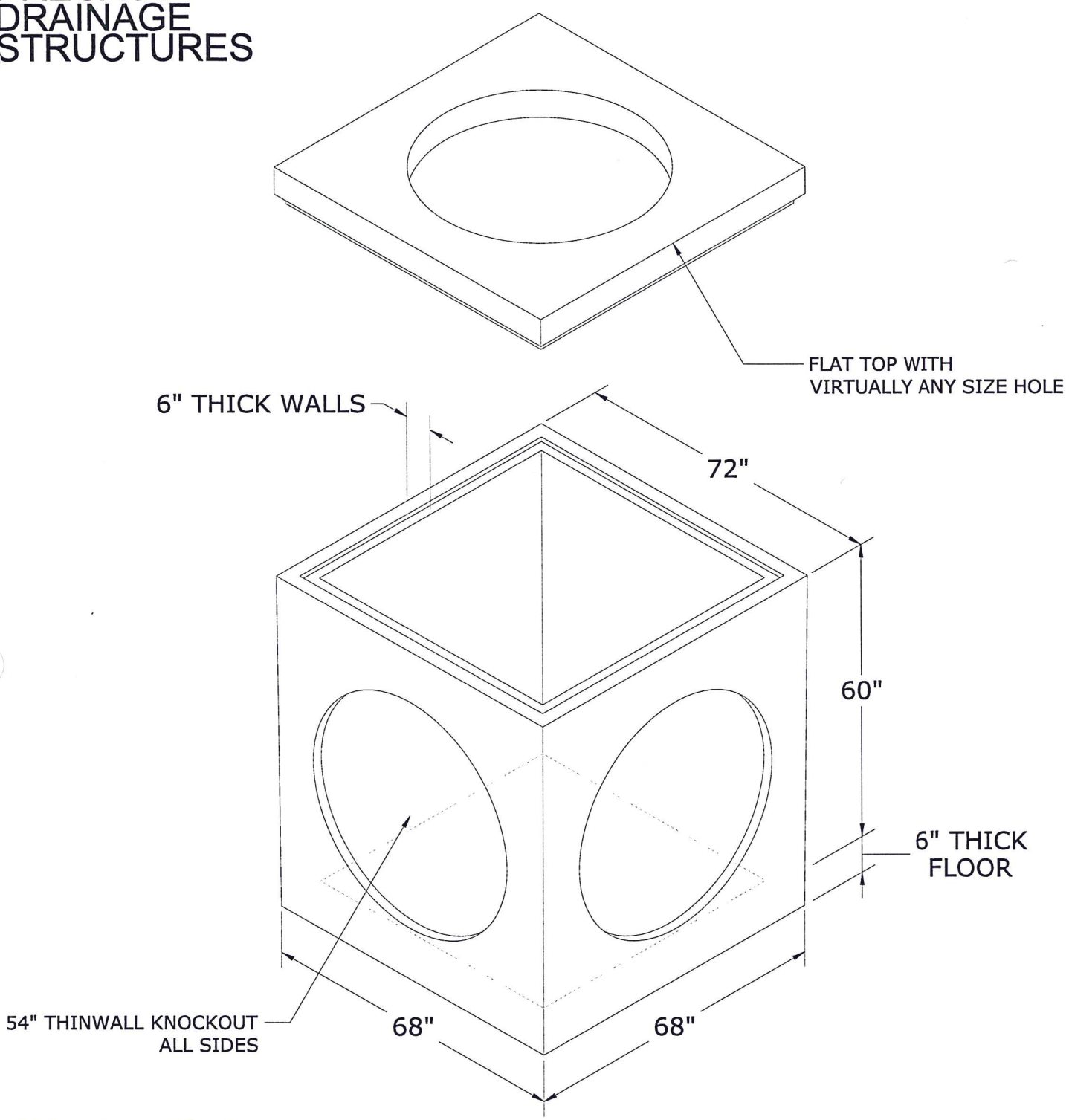

Materials and Features

CONCRETE : 4,500 P.S.I.
MEETS ASTM 913.08 STANDARD
REINFORCED TO H20 LOADING
WEIGHT : 9,625 LBS.
MAXIMUM RCP : 42"
RISER SECTIONS AVAILABLE

-No Scale-
All Dimensions subject to allowable specification tolerances.

TITLE	DATE	
5' x 5' JUNCTION BOX	12-16-12	Austin Precast