RRSPL-DR-6100

PRECAST DRAINAGE STRUCTURES

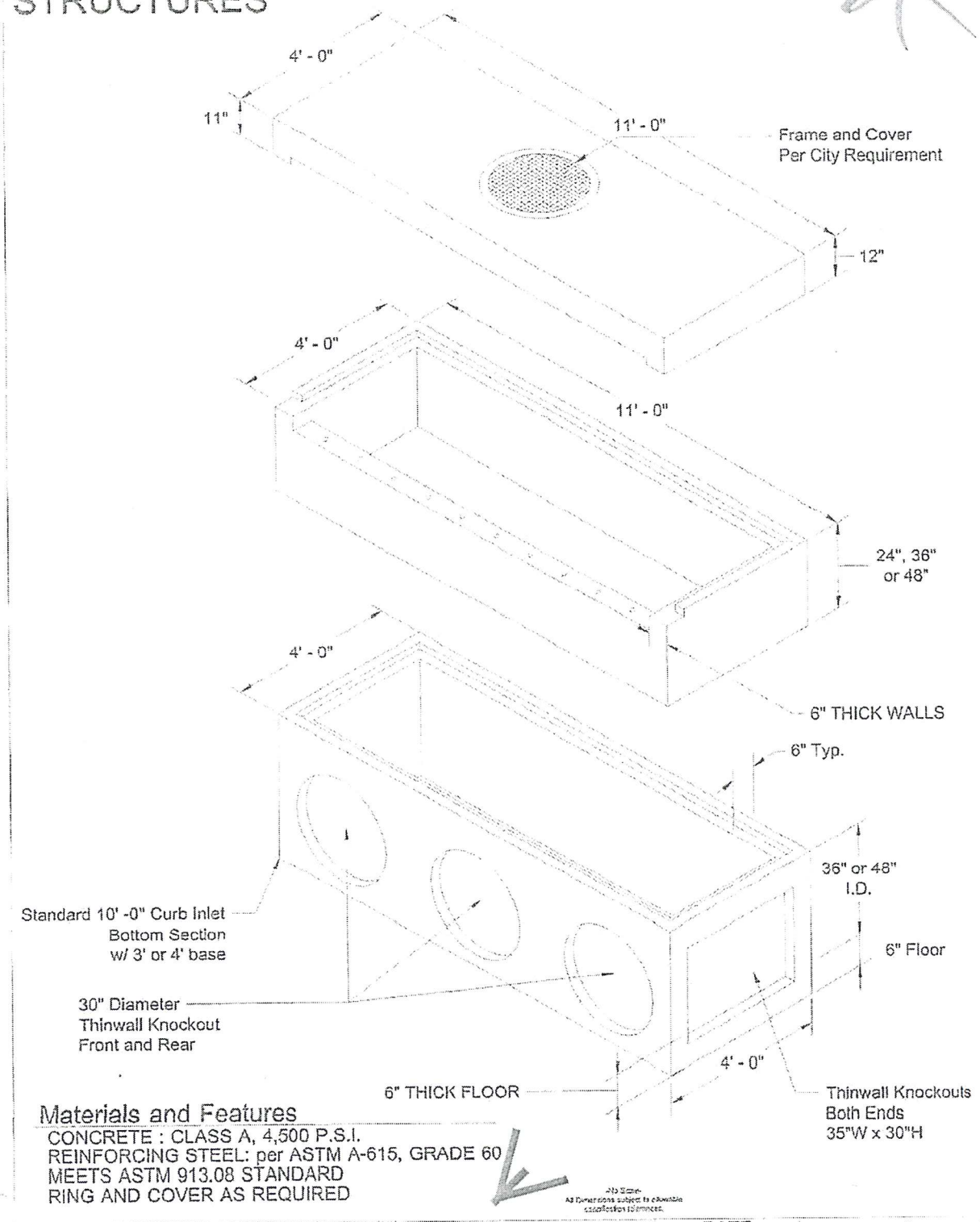

Materials and Features

CONCRETE : CLASS A, 4,500 P.S.I.
REINFORCING STEEL: per ASTM A-615, GRADE 60
MEETS ASTM 913.08 STANDARD
RING AND COVER AS REQUIRED

	DATE	
Variable Depth City of Austin 10' Curb Inlet	4-14-13	Austin Precast

PRECAST DRAINAGE STRUCTURES

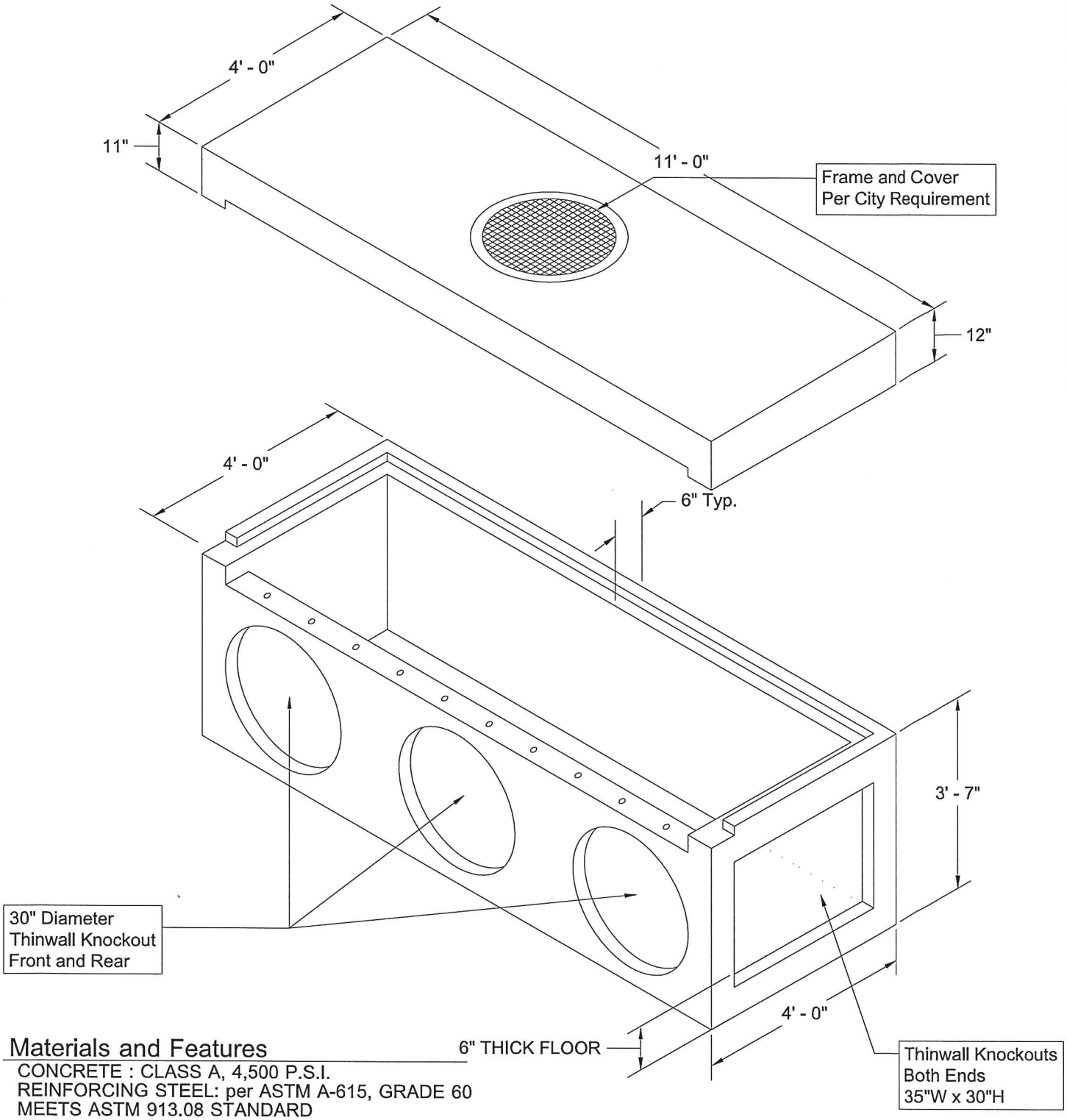

Materials and Features

CONCRETE : CLASS A, 4,500 P.S.I.
REINFORCING STEEL: per ASTM A-615, GRADE 60
MEETS ASTM 913.08 STANDARD
LIFTING: 1" COIL INSERTS.
RING AND COVER AS REQUIRED

-No Scale-
All Dimensions subject to allowable specification tolerances.

TITLE	DATE	
10' Curb Inlet with 4' Invert	12-16-12	Austin Precast