RRSPL - WT - 0200 (B-1.5)

SUBMITTAL INFORMATION

Ballcorp Corporation Stops - *(FB1100-6-G-NL style)*

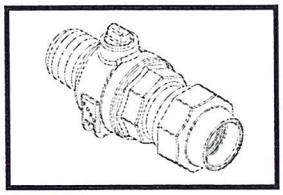

MALE IRON PIPE THREAD INLET BY GRIP JOINT FOR COPPER OR PLASTIC TUBING (CTS) OUTLET

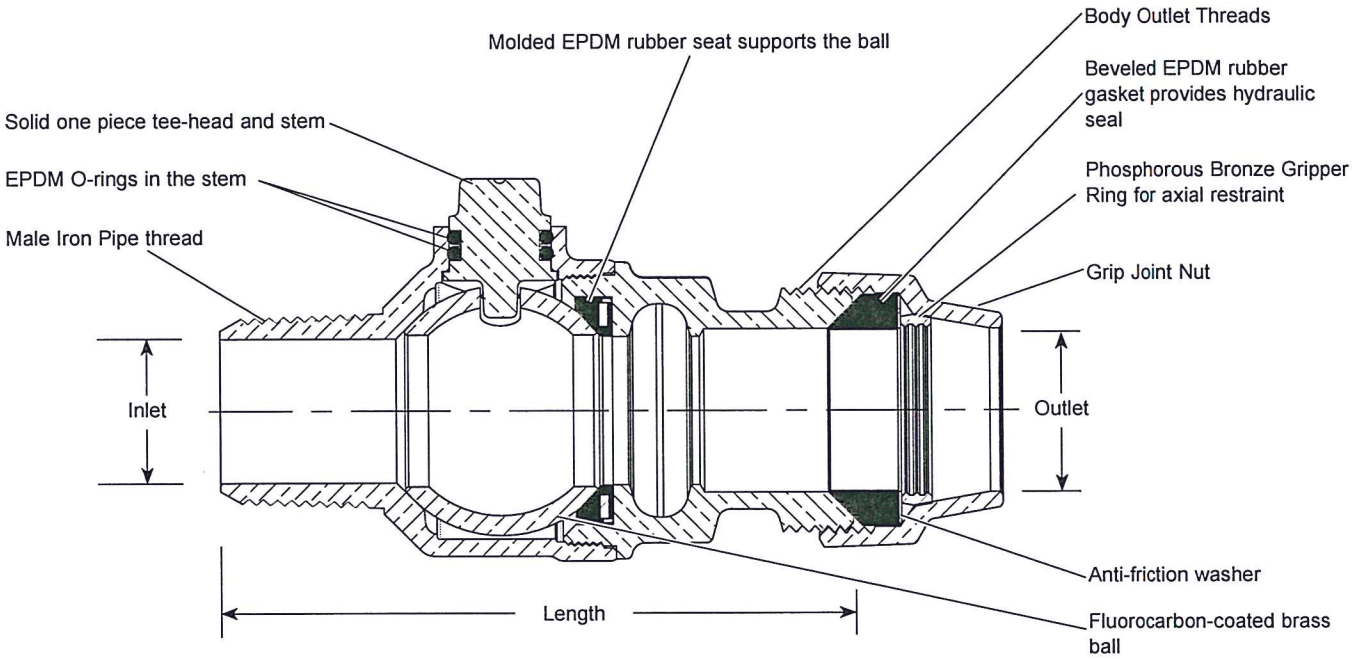

Valve Size	Inlet Size	Outlet Size	Valve Length	Body Outlet Threads	Approx. Wt. Lbs	Part Number	✓ Submitted Item(s)
1-1/2"	1-1/2"	1-1/2"	6-25/64"	1-1/2" Flare Copper	4.9	FB1100-6-G-NL	

Note: Ford recommends using insert stiffeners with plastic pipe or tubing.

FEATURES

- All brass that comes in contact with potable water conforms to AWWA Standard C800 (UNS NO C89833)
- UL Classified to ANSI/NSF Standard 61 and Annex G (372)
- The product has the letters "NL" cast into the main body for proper identification
- Brass components that do not come in contact with potable water conform to AWWA Standard C800 (ASTM B-62 and ASTM B-584, UNS NO C83600 - 85-5-5-5)
- Ends are integral or secured with adhesive to prevent unintentional disassembly
- 300 PSI working pressure

The Ford Meter Box Company considers the information in this submittal form to be correct at the time of publication. Item and option availability, including specifications, are subject to change without notice. Please verify that your product information is current.

The Ford Meter Box Company, Inc.
P.O. Box 443, Wabash, Indiana U.S.A. 46992-0443
Phone: 260-563-3171 / Fax: 800-826-3487
Overseas Fax: 260-563-0167
http://www.fordmeterbox.com
01/24/13

Submitted By:

RR SPL-WT-0200 (B-1)

SUBMITTAL INFORMATION

Ballcorp Corporation Stops - *(FB1100-4x-G-NL style)*

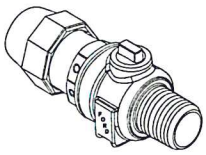

MALE IRON PIPE THREAD INLET BY GRIP JOINT FOR COPPER OR PLASTIC TUBING (CTS) OUTLET

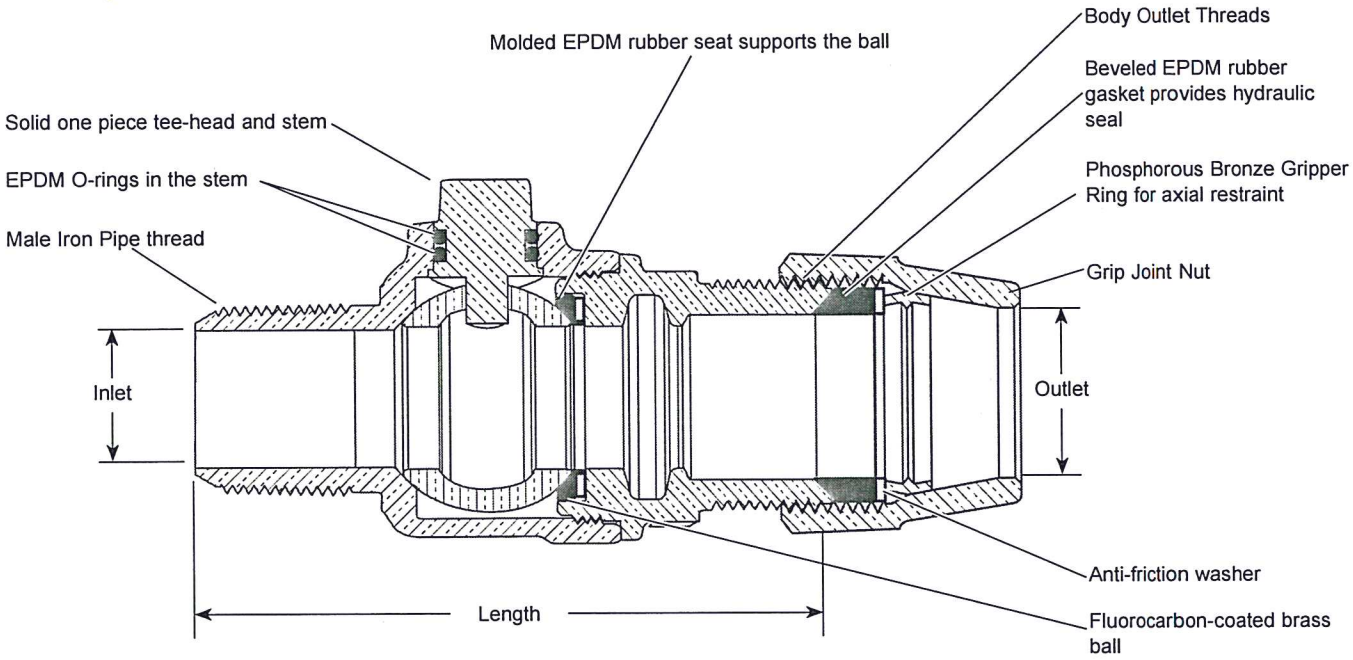

Valve Size	Inlet Size	Outlet Size	Valve Length	Body Outlet Threads	Approx. Wt. Lbs	Part Number	✓ Submitted Item(s)
1"	1"	1"	4-13/64"	1" Flare Copper	2.5	FB1100-4-G-NL	
1"	1"	1-1/4"	4-9/16"	1-1/4" Flare Copper	3.3	FB1100-45-G-NL	

Note: Ford recommends using insert stiffeners with plastic pipe or tubing.

FEATURES

- All brass that comes in contact with potable water conforms to AWWA Standard C800 (UNS NO C89833)
- The product has the letters "NL" cast into the main body for proper identification
- UL Classified to ANSI/NSF Standard 61 and Standard 61 Annex G (NSF/ANSI 372)
- Brass components that do not come in contact with potable water conform to AWWA Standard C800 (ASTM B-62 and ASTM B-584, UNS NO C83600 - 85-5-5-5)
- Ends are integral or secured with adhesive to prevent unintentional disassembly
- 300 PSI working pressure

The Ford Meter Box Company considers the information in this submittal form to be correct at the time of publication. Item and option availability, including specifications, are subject to change without notice. Please verify that your product information is current.

The Ford Meter Box Company, Inc.
P.O. Box 443, Wabash, Indiana U.S.A. 46992-0443
Phone: 260-563-3171 / Fax: 800-826-3487
Overseas Fax: 260-563-0167
http://www.fordmeterbox.com
02/04/13

Submitted By:

RRSPL - WT - 0200 (B-1.5)

SUBMITTAL INFORMATION

Ballcorp Corporation Stops - *(FB1100-6-G-NL style)*

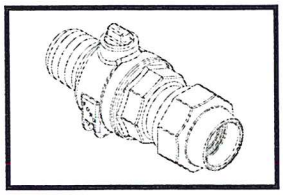

MALE IRON PIPE THREAD INLET BY GRIP JOINT FOR COPPER OR PLASTIC TUBING (CTS) OUTLET

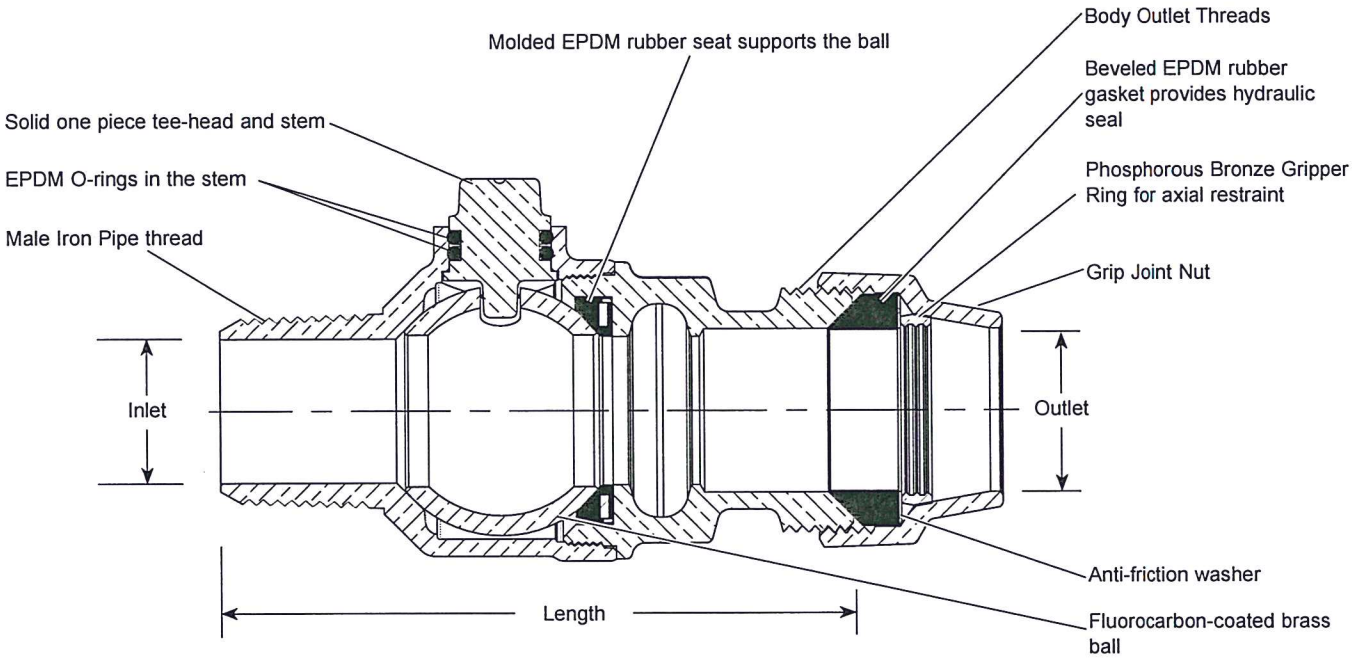

Valve Size	Inlet Size	Outlet Size	Valve Length	Body Outlet Threads	Approx. Wt. Lbs	Part Number	✓ Submitted Item(s)
1-1/2"	1-1/2"	1-1/2"	6-25/64"	1-1/2" Flare Copper	4.9	FB1100-6-G-NL	

Note: Ford recommends using insert stiffeners with plastic pipe or tubing.

FEATURES

- All brass that comes in contact with potable water conforms to AWWA Standard C800 (UNS NO C89833)
- UL Classified to ANSI/NSF Standard 61 and Annex G (372)
- The product has the letters "NL" cast into the main body for proper identification
- Brass components that do not come in contact with potable water conform to AWWA Standard C800 (ASTM B-62 and ASTM B-584, UNS NO C83600 - 85-5-5-5)
- Ends are integral or secured with adhesive to prevent unintentional disassembly
- 300 PSI working pressure

The Ford Meter Box Company considers the information in this submittal form to be correct at the time of publication. Item and option availability, including specifications, are subject to change without notice. Please verify that your product information is current.

The Ford Meter Box Company, Inc.
P.O. Box 443, Wabash, Indiana U.S.A. 46992-0443
Phone: 260-563-3171 / Fax: 800-826-3487
Overseas Fax: 260-563-0167
http://www.fordmeterbox.com
01/24/13

Submitted By: