RRSPL-WT-0200 (E38C)

# Rotec Meter and Valve Box Series

## DFW38C

### 17" x 15" Large C Series

- Patent Pending E Series Lid with AMR Slide Mounts
- Lid sits flush in box
- Available with Cast Iron Reader lid
- Available with "L" Bolt , "Bolt Down" or "Key" locking options
- Skid Resistant texture on lid
- Product designed for installation in non-deliberate or incidental traffic areas. Not intended for installation in roadways.
- Special blend polyethylene plastics

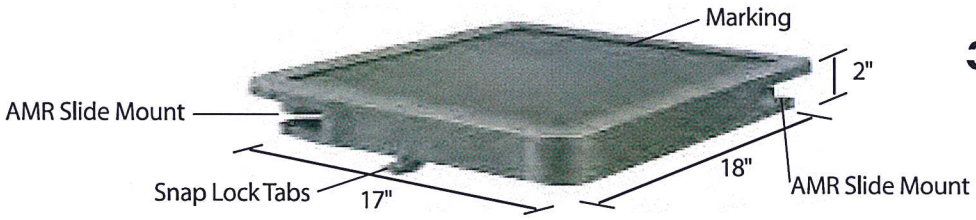


**38C Lid**

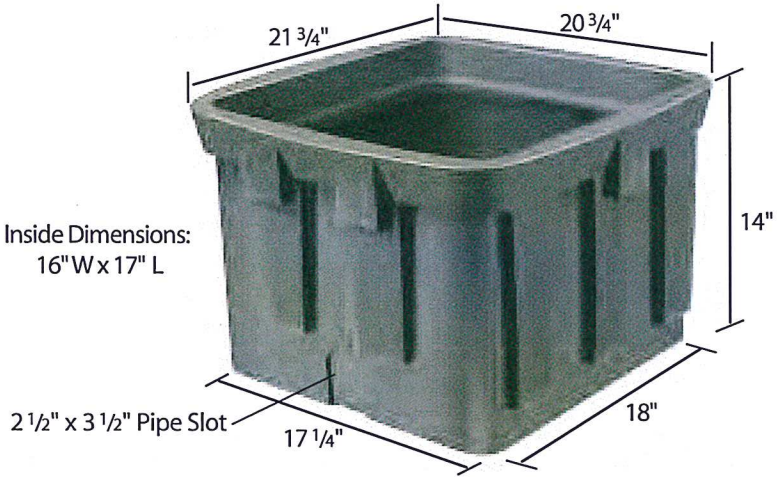


**38C Body**

Made in USA
Pat. Pending
*Dimensions may vary slightly*

**DFW PLASTICS, INC.** P.O. Box 648 ~ Bedford, Texas 76095 ~ USA ~ 817.439.3600 ~ Fax 817.439.3700