RRSPL-WT-2200

SERIES 2500 RESILIENT WEDGE GATE VALVE

RWGV1

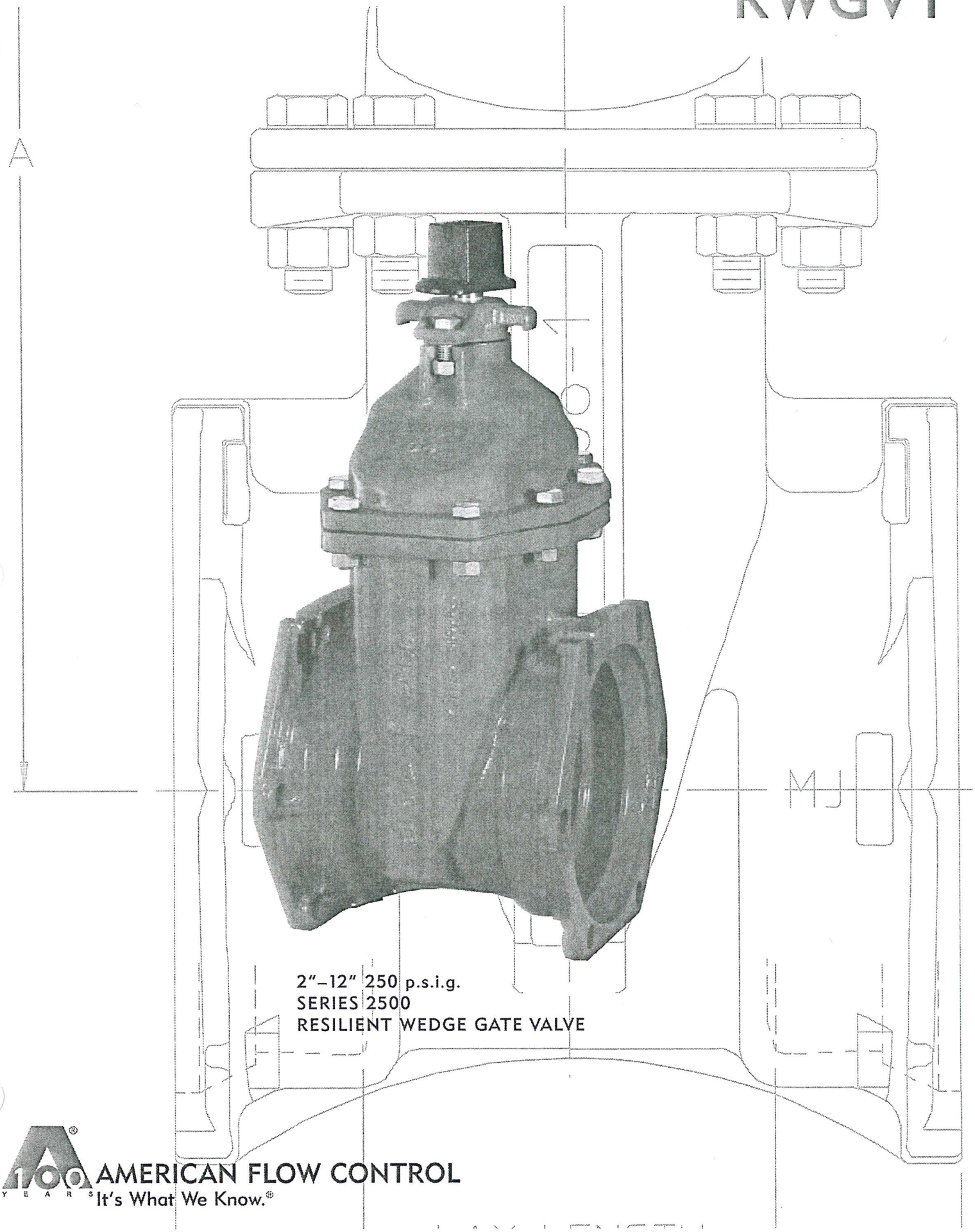

2"–12" 250 p.s.i.g.
SERIES 2500
RESILIENT WEDGE GATE VALVE

100 YEARS AMERICAN FLOW CONTROL
It's What We Know.®

CONSTRUCTION

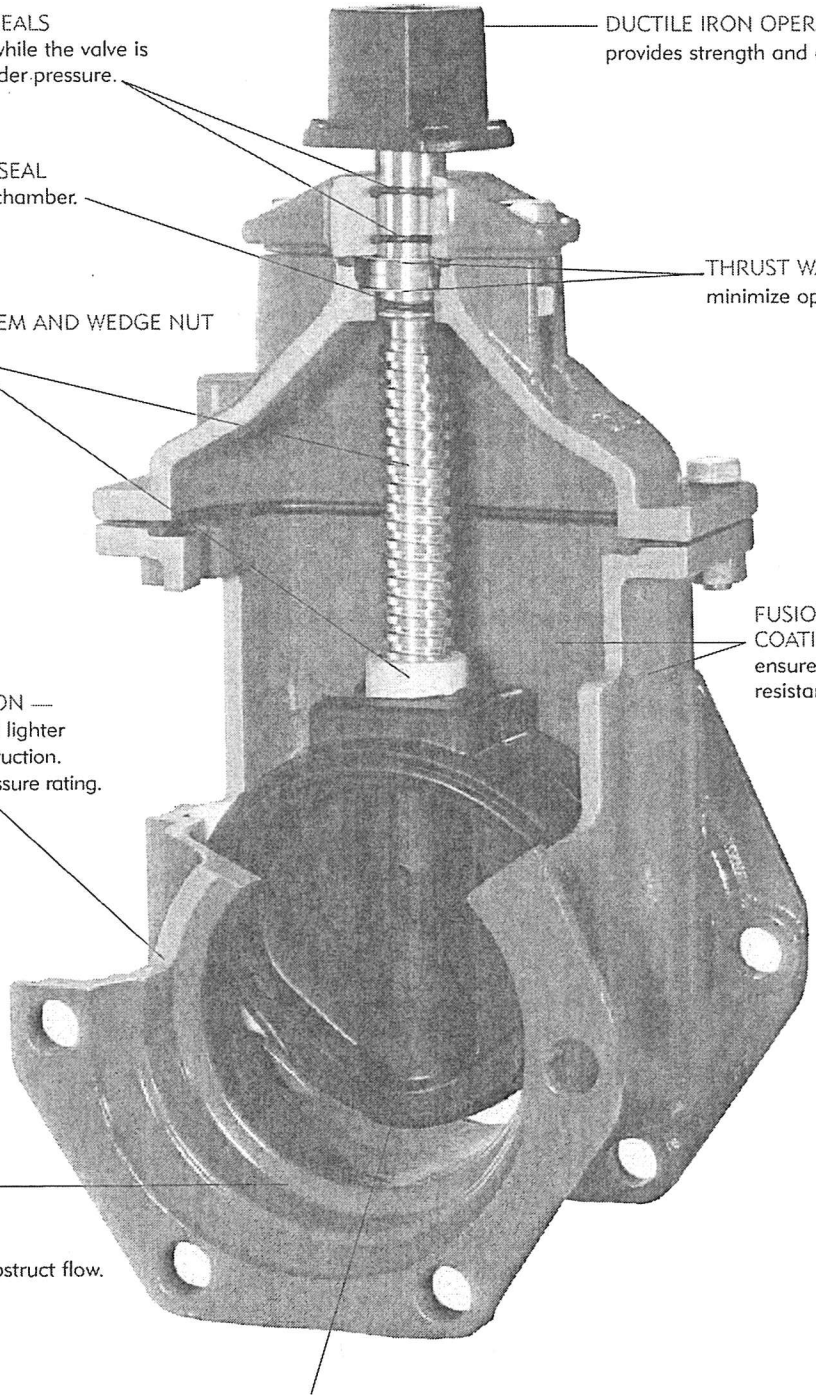

FEATURES/BENEFITS/SPECIFICATIONS

FEATURES

The **Series 2500** Ductile Iron 250 p.s.i.g. AWWA Resilient Wedge Gate Valve is designed for use in drinking water, sewage, and fire protection systems as well as irrigation and backflow control systems.

Ductile Iron Construction

The ductile iron body, bonnet, and wedge provide strength and a pressure rating that meets or exceeds the requirements of AWWA C515. Strength more than doubles that provided by cast gray iron designs, and the pressure rating is 250 p.s.i.g. All this strength and higher pressure rating is provided in a compact, lightweight, and easy-to-handle ductile iron valve.

Fusion-Bonded Epoxy

The **Series 2500** valve is fully epoxy coated on the interior and the exterior. The fusion-bonded coating is applied prior to assembly so that even the bolt holes and body-to-bonnet flange surfaces are fully epoxy coated.

Triple O-Ring Stem Seals

This valve features triple O-Ring stem seals. Two O-Rings are located above, and one O-Ring is located below the thrust collar. The lower two O-Rings provide a permanently sealed lubrication chamber that will make the valve easier to operate over a longer period of time. The upper O-Ring ensures that sand, dirt, or grit cannot enter the valve to cause damage to the lower O-Rings. This is especially important for buried and sewage service applications.

Thrust Washers

Two thrust washers are used. One is located above, and one is located below the thrust collar. These thrust washers ensure easy operation at all times.

No Flat Gaskets

The body-to-bonnet and bonnet-to-bonnet cover seals are pressure-energized O-Rings. This eliminates the need for excessive bolt loading, which is required by designs that use flat gaskets. The O-Rings are reusable, which eliminates downtime during any needed repair.

The **Series 2500** Resilient Wedge Gate Valve is furnished in configurations that are Listed by Underwriters Laboratories, Inc. and Approved by Factory Mutual Research Corp.

BENEFITS

The **Series 2500 Ductile Iron Resilient Wedge Gate Valve** has these standard features:

- UL Listed-FM Approved
- Seat Tested at 500 p.s.i.g.
- Fusion-Bonded-Epoxy Coating Complies With ANSI/AWWA C550
- 250# Raised Face Flanges Available
- Ductile Iron Body, Bonnet, Wedge, Operating Nut, and Stuffing Box
- Shell Tested at 500 p.s.i.g.
- 250 p.s.i.g. AWWA UL and FM Pressure Rating
- Rubber-Encapsulated Wedge
- Triple O-Ring Stem Seals
- Thrust Washers
- Smooth (No Pocket) Waterway
- 100% Leak-Tight Closure
- NSF Standard 61 Certified
- Complies with AWWA C515

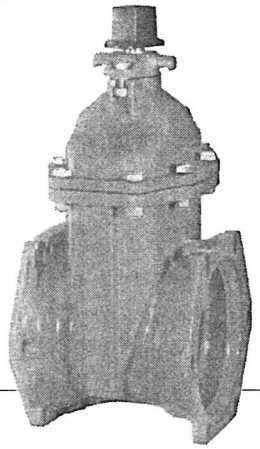

SPECIFICATIONS

Valves 2"-12" shall be resilient wedge type rated for 250 p.s.i.g. cold water working pressure. All ferrous components shall be ductile iron, ASTM A536. Valves 3"-12" shall be in full compliance with AWWA C515. The words "D.I." or "Ductile Iron" shall be cast on the valve. The wedge shall be ductile iron or bronze encapsulated with EPDM rubber.

The wedge shall be symmetrical and seal equally well with flow in either direction.

The gate valve stem and wedge nut shall be copper alloy in accordance with Section 4.4.5.1 of the AWWA C515 Standard. Stainless Steel stems are not acceptable. The NRS stem must have an integral thrust collar in accordance with Section 4.4.5.3 of AWWA C515 Standard. Two-piece stem collars are not acceptable. The wedge nut shall be independent of the wedge and held in place on three sides by the wedge to prevent possible misalignment.

Valves shall be certified by NSF to Standard 61.

Bolting materials shall develop the physical strength requirements of ASTM A307 and may have either regular square or hexagonal heads with dimensions conforming to ANSI B18.2.1. Metric size socket head cap screws, therefore, are not allowed.

The operating nut shall be constructed of ductile iron and shall have four flats at stem connection to ensure even input torque to the stem.

All gaskets shall be pressure-energized O-Rings.

Stem shall be sealed by three O-Rings. The top two O-Rings shall be replaceable with valve fully open and while subject to full rated working pressure. O-Rings set in a cartridge shall not be allowed.

Valve shall have thrust washers located with (1) above and (1) below the thrust collar to ensure trouble-free operation of the valve.

All internal and external surfaces of the valve body and bonnet shall have a fusion-bonded-epoxy coating, complying with ANSI/AWWA C550, applied electrostatically prior to assembly.

Valves shall be American Flow Control's **Series 2500 Ductile Iron Resilient Wedge Gate Valve.**

DRAWING/DIMENSIONS

SERIES 2500 – STANDARD NRS DIMENSIONS 2"-12" SIZES

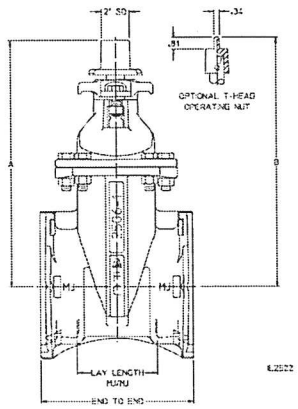

SHOWN WITH 2" OPERATING NUT

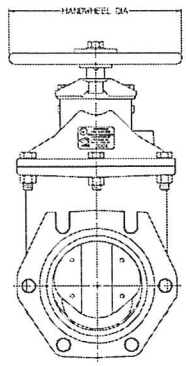

SHOWN WITH OPTIONAL HANDWHEEL

SUBMITTAL DATA

QUANTITY							
2"	2-1/2"	3"	4"	6"	8"	10"	12"

- ❑ NRS with 2" Sq. Oper. Nut
- ❑ NRS with T-Head Oper. Nut
- ❑ NRS with Handwheel
- ❑ Post Indicator Valve (PIV)
- ❑ OS & Y

ACTUATOR (Check One)

- ❑ NRS with Enclosed Miter Gearing
- ❑ 2" Sq. Oper. Nut Parallel to Waterway
- ❑ 2" Sq. Oper. Nut Perpendicular to Waterway
- ❑ Handwheel Perpendicular to Waterway

Open Direction:	❑ Left (C.C.W.)	❑ Right (C.W.)
End Connections:		
Mechanical Joint Accessories:	❑ Yes	❑ No
UL Listed, FM Approved:	❑ Yes	❑ No
Other Requirements (List on a separate sheet):		

See notes at bottom of page.

DIMENSION	VALVE SIZE							
	Series 2500			Series 2500-1				
	2"	2-1/2"	3"	4"	6"	8"	10"	12"
A	9.25	11.03	11.84	13.91	17.12	20.47	24.06	27.59
B	10.22	12.00	N/A	N/A	N/A	N/A	N/A	N/A
End to End – MJ/MJ	8.25	N/A	8.62	10.00	10.50	11.50	12.50	13.50
Lay Length – MJ/MJ	3.25	N/A	3.62	5.00	5.50	6.50	7.50	8.50
End to End – FL/FL (Class 125)	7.00	7.50	8.00	9.00	10.50	11.50	13.00	14.00
End to End – FL/FL (Class 250)	N/A	N/A	11.12	12.00	15.88	16.50	18.00	19.75
End to End – TY/TY	N/A	N/A	N/A	13.00	15.88	17.50	18.75	19.75
End to End – FL/MJ (Class 125)	N/A	N/A	N/A	9.50	10.50	12.28	13.62	14.38
End to End – FL/TY (Class 125)	N/A	N/A	N/A	11.00	13.19	14.50	15.88	16.88
End to End – PVC/PVC	10.75	11.12	11.38	13.00	15.88	17.50	N/A	N/A
End to End – Threaded	6.25	7.38	7.38	N/A	N/A	N/A	N/A	N/A
Handwheel Diameter	8.06	8.00	8.00	10.00	12.00	14.00	15.50	15.50
No. of Turns to Open	9	11	13	14	20	26	32	38

1. 3" through 12" valves meet or exceed requirements of ANSI/AWWA C515.
2. 2-1/2" through 12" valves may be ordered in configurations which are UL Listed and/or FM Approved.
3. 2" through 12" valves have 250 p.s.i.g. AWWA rated working pressure.
4. 2-1/2" through 12" valves have 250 p.s.i.g. UL and FM rated working pressure.
5. Fusion-bonded-epoxy coating meets or exceeds requirements of ASME/AWWA C550.
6. Flanged ends are in accordance with ANSI/AWWA C110/A21.10 (ASME B16.1, Class 125).
7. Threaded ends are in accordance with ASME B16.4, Class 125.
8. Mechanical joint ends are in accordance with ANSI/AWWA C111/A21.11.
9. Tyton* ends and push-on ends are in accordance with ANSI/AWWA C111/A21.11 for use on cast iron (CI) size ductile iron pipe.
10. PVC ends are suitable for use on steel (IPS) sizes of PVC or steel pipe.
11. 4" through 36" valves are certified to ANSI/NSF Standard 61.
12. It is recommended that stems be vertical in raw sewage applications.

DRAWING/DIMENSIONS/PARTS LIST

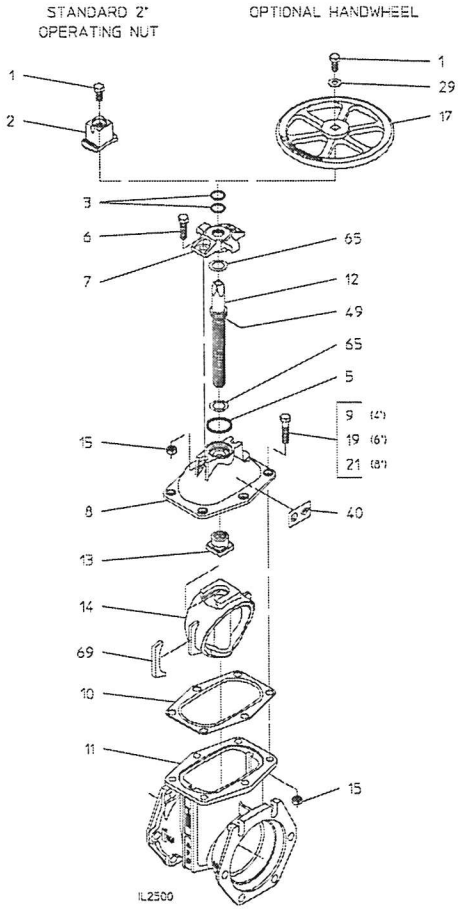

SERIES 2500-1 – STANDARD NRS PARTS LIST
4" – 8" SIZES

REFERENCE NUMBER	DESCRIPTION	MATERIAL	QTY Series 2500-1		
			4"	6"	8"
1	Hex Head Bolt, 5/8-11 x 1"	Stainless Steel	1	1	1
2	Operating Nut, 2" Square	Ductile Iron	1	1	1
3	O-Ring	Nitrile Rubber	2	2	2
5	Stuffing Box Gasket	Nitrile Rubber O-Ring	1	1	1
6	Hex Head Bolt, 5/8-11 x 1-3/4"	Stainless Steel	2	2	2
7	Stuffing Box	Ductile Iron	1	1	1
8	Bonnet	Ductile Iron	1	1	1
9	Hex Head Bolt, 5/8-11 x 2"	Stainless Steel	4	–	–
10	Bonnet Gasket	EPDM Rubber	1	1	1
11	Body	Ductile Iron	1	1	1
12	Stem	Manganese Bronze	1	1	1
13	Wedge Nut	Manganese Bronze	1	1	1
14	Resilient Wedge	Ductile Iron, Encapsulated with EPDM Rubber	1	1	1
15	Hex Nut, 5/8-11	Stainless Steel	6	8	10
17	Handwheel	Ductile Iron	1	1	1
19	Hex Head Bolt, 5/8-11 x 2-1/4"	Stainless Steel	–	6	–
21	Hex Head Bolt, 5/8-11 x 2-1/2"	Stainless Steel	–	–	8
29	Flat Washer, 5/8	Stainless Steel	1	1	1
40	UL/FM Label	Pressure-Sensitive Acrylic Film	1	1	1
49	O-Ring	Nitrile Rubber	1	1	1
65	Thrust Washer	Stainless Steel	2	2	2
69	Wedge Cover	Acetal	2	2	2

DRAWING/DIMENSIONS/PARTS LIST

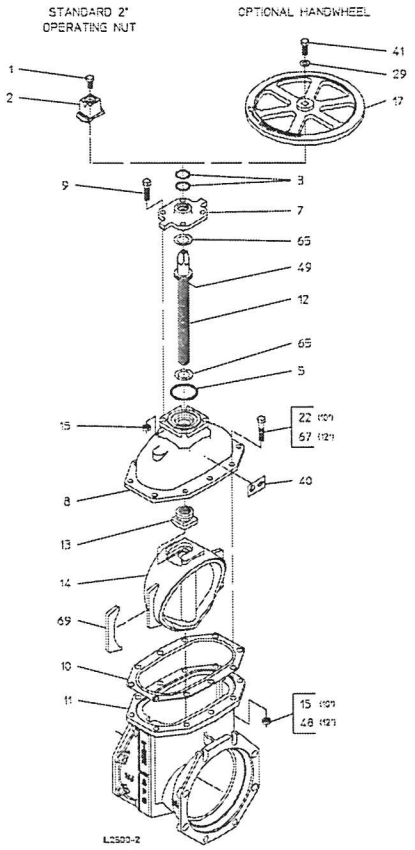

SERIES 2500-1 – STANDARD NRS PARTS LIST
10" & 12" SIZES

REFERENCE NUMBER	DESCRIPTION	MATERIAL	QTY Series 2500-1	
			10"	12"
1	Hex Head Bolt, 5/8-11 x 1"	Stainless Steel	1	1
2	Operating Nut, 2" Square	Ductile Iron	1	1
3	O-Ring	Nitrile Rubber	2	2
5	Stuffing Box Gasket	Nitrile Rubber O-Ring	1	1
7	Stuffing Box	Ductile Iron	1	1
8	Bonnet	Ductile Iron	1	1
9	Hex Head Bolt, 5/8-11 x 2"	Stainless Steel	4	4
10	Bonnet Gasket	EPDM Rubber	1	1
11	Body	Ductile Iron	1	1
12	Stem	Manganese Bronze	1	1
13	Wedge Nut	Manganese Bronze	1	1
14	Resilient Wedge	Ductile Iron, Encapsulated with EPDM Rubber	1	1
15	Hex Nut, 5/8-11	Stainless Steel	14	4
17	Handwheel	Ductile Iron	1	1
22	Hex Head Bolt, 5/8-11 x 2-3/4"	Stainless Steel	10	–
29	Flat Washer, 5/8	Stainless Steel	1	1
40	UL/FM Label	Pressure-Sensitive Acrylic Film	1	1
41	Hex Head Bolt, 5/8-11 x 1-1/2"	Stainless Steel	1	1
48	Hex Nut, 3/4-10	Stainless Steel	–	10
49	O-Ring	Nitrile Rubber	1	1
65	Thrust Washer	Stainless Steel	2	2
67	Hex Head Bolt, 3/4-10 x 3"	Stainless Steel	–	10
69	Wedge Cover	Acetal	2	2