RRSPL - WT - 4300

411 Steel Couplings
Material Specifications

Gasket Material Specifications

STANDARD: Nitrile (Buna-N)-NSF 61 Compounded to produce superior storage and performance characteristics while resisting water, acids, alkalies, most (aliphatic) hydrocarbons and many other chemicals. Temperature range -20°F. to 180°F. Consult manufacturer for specific applications or other service temperatures.

Optional: Nitrile (Buna N) Protected.
A continuous brass spring molded into the leading edge of the gasket to insure metal contact between the pipe and the coupling sleeve. Extra protection is given against line content and the coupling is electrically bonded to the pipe.

Material Specifications are subject to change.

1/2" - 2" (12mm - 50 mm)

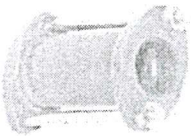

Standard weight, two bolt design with cast follower, steel sleeve, and electro-galvanized steel bolts and nuts.

Material Specifications

SLEEVE:	Carbon steel having a minimum yield of 30,000 psi.
FOLLOWERS:	Ductile iron ASTM A536.
BOLTS & NUTS:	Carbon steel ASTM A307 electrogalvanized with di-chromate seal. *Optional: Stainless steel.*
FINISH:	Fusion bonded Flexi-Coat Epoxy per AWWA C213.

Material Specifications are subject to change.

3" - 12" (70mm - 300mm)

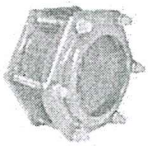

Standard weight design with steel followers, steel sleeve, and high-strength low-alloy bolts and nuts.

Material Specifications

SLEEVE:	ASTM A53, ASTM A513 or carbon steel having a minimum yield of 30,000 psi.
FOLLOWERS:	ASTM A715 Grade 80 HSLA Steel.
BOLTS & NUTS:	High strength, low-alloy steel with heavy, semi-finished hexagon nuts. *Optional: Stainless Steel and electro-galvanized.*
FINISH:	Fusion bonded Flexi-Coat Epoxy per AWWA C213.

Material Specifications are subject to change.

2" - 12" (50mm - 300mm)

Standard weight design with cast follower, steel sleeve and low-alloy bolts and nuts.

Material Specifications

SLEEVE:	ASTM A53, ASTM A513 or carbon steel having a minimum yield of 30,000 psi.
FOLLOWERS:	Ductile iron ASTM A536 or carbon steel having a minimum yield of 30,000 psi.
BOLTS & NUTS:	High-strength, low-alloy steel with heavy semi-finished hexagon nuts. *Optional: Stainless steel and electro-galvanized.*
FINISH:	Fusion bonded Flexi-Coat Epoxy per AWWA C213.

Material Specifications are subject to change.

14" - 60" (355mm - 1500mm)

Standard and heavy weight design with heavy rolled steel follower, steel sleeve and high strength low-alloy bolts and nuts.

Material Specifications

SLEEVE:	Carbon steel having a minimum yield of 30,000 psi.
FOLLOWERS:	AISI C1020 steel.
BOLTS & NUTS:	High strength, low-alloy steel with heavy, semi-finished hexagon nuts. *Optional: Stainless Steel and electro-galvanized.*
FINISH:	Fusion bonded Flexi-Coat Epoxy per AWWA C213.

Material Specifications are subject to change.

411 Steel Couplings

Smith-Blair Pipe Couplings offer many distinct advantages when installed in a piping system. Properly selected and installed flexible couplings maintain the continuity of the pipe system, retain the line contents under internal pressure and prevent infiltration under vacuum.

411 Steel Coupling Parts

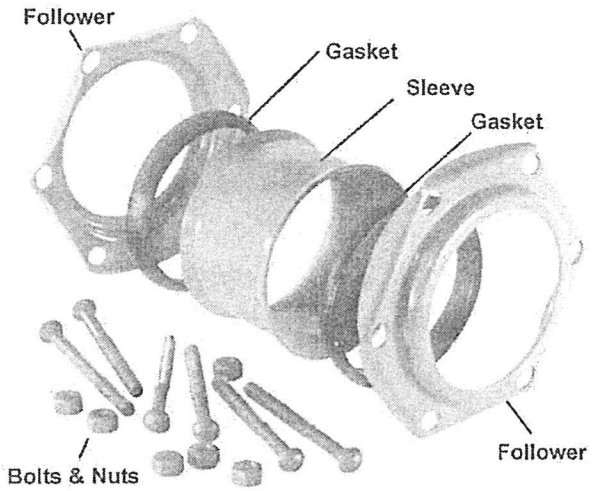

Smith-Blair water couplings consists of one cylindrical sleeve with conical inner surfaces at each end; two resilient, wedge shaped, specially-compounded rubber gaskets; two ring shaped followers; and a set of high-strength, low-alloy track head, oval neck, rolled-thread bolts with heavy hex nuts.

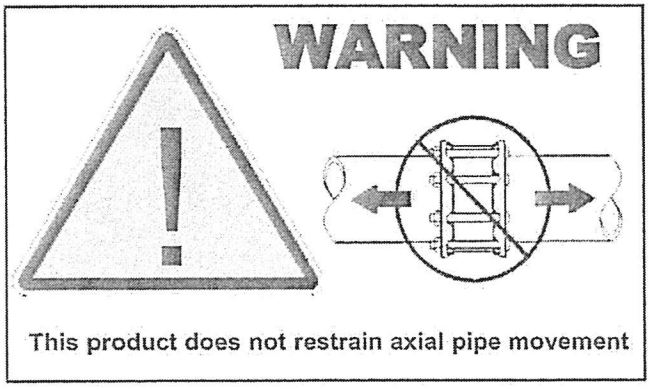

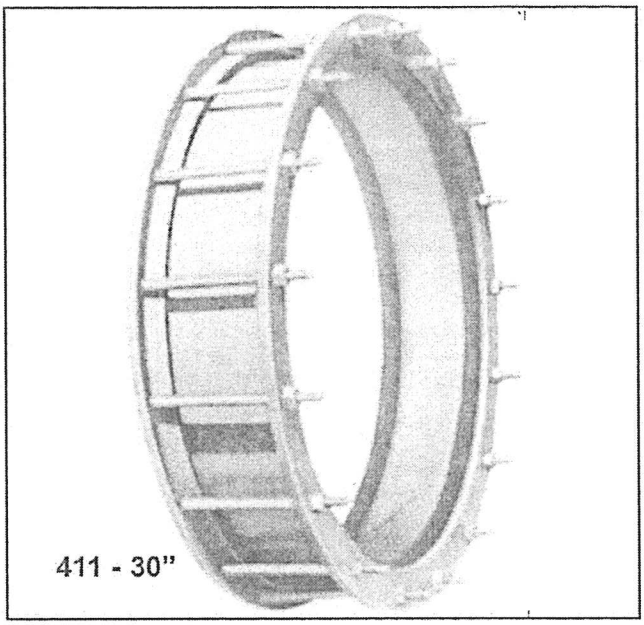

411 Steel Coupling Advantages

- No special pipe end preparation required.
- Simple installation requires only a wrench.
- Pipe does not have to be cut to exact length.
- Exact alignment of pipe ends is not necessary.
- Coupling fits on outside wall of pipe so there are no internal projections to disturb flow and no damage to the pipe lining.
- Many types of pipe, including pipes of different materials, can be joined.
- Every joint is a union (a length of pipe can be removed by disassembling the coupling).
- Coupling allows for limited expansion and contraction.
- Coupling dampens vibration.
- Deflection capability of coupling permits installation of curves or changes in grade without the use of special pipe fabrications.
- Coupling allows for angular deflection caused by settlement or lateral movement after installation.
- Coupling can be installed in any environment, so weather is not a factor.
- Fire hazard eliminated because no welding is required.
- Coupling increases the hoop strength of the pipe at the joint.

411 Steel Couplings

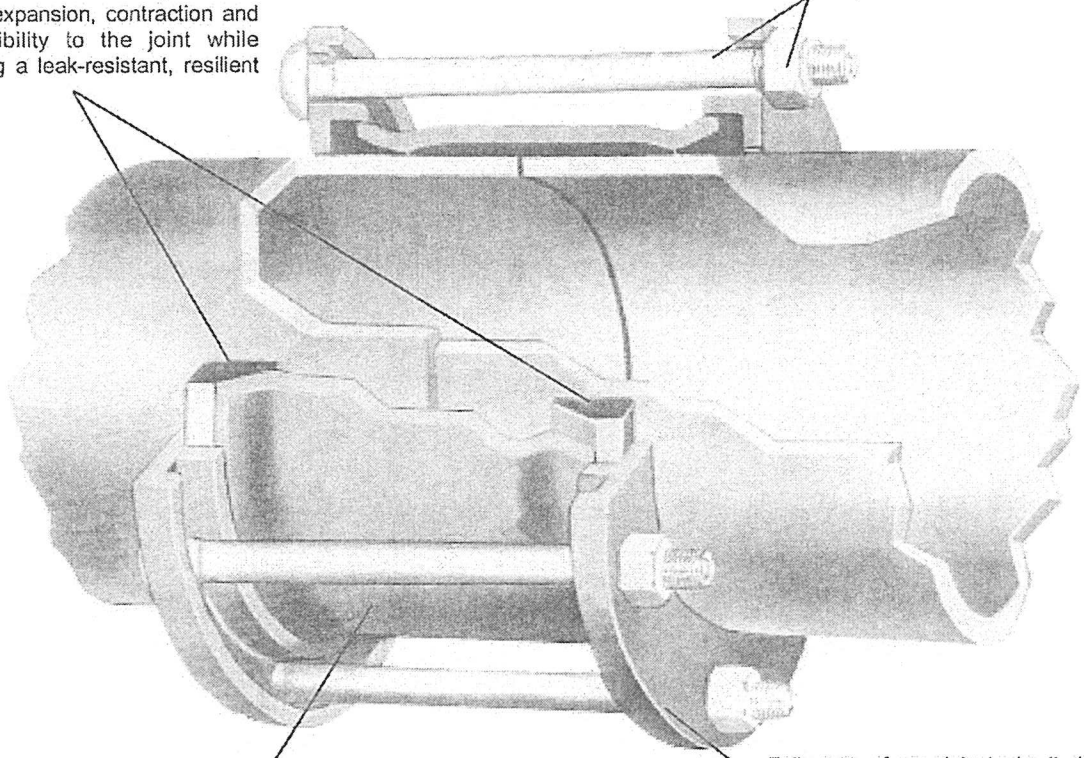

Coupling Parts Loose on Pipe

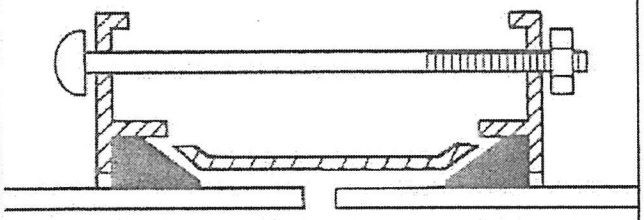

The coupling is assembled on the pipes with the sleeve centered over the pipe ends, a wedge-shaped gasket engaging the conical inner surface on each end of the sleeve, a follower confining the outer surface of each gasket and the bolts joining the followers.

Coupling Parts After Tightening Bolts

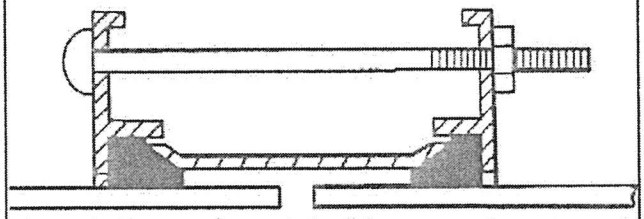

As the bolts are tightened, the followers are drawn toward each other compacting the gaskets in the cavity formed by the sleeve conical surface, follower and the pipe wall. This forms a flexible, leak-resistant, safe method of joining pipe. The coupling is floating on the pipe and stresses caused by expansion, contraction or angular deflection can be absorbed.

Anchor Stud Couplings and Pipe Stops (Optional)

Smith-Blair Anchor Stud Couplings are designed as an alternative coupling method to harness assemblies for applications where moderate longitudinal stresses are encountered. They have been used successfully in: power plant situations where fluctuating pressures are present, on tank risers in earthquake prone areas, in sprinkler systems and anywhere extra axial holding strength is required.

The drawing to the right illustrates how leak-resistant anchor studs are threaded through the coupling and into the pipe to provide a secure lock. Please consult Smith-Blair engineers for specific anchor stud coupling recommendations to fit your special application. Anchor studs do not eliminate the need for fixed pipe support. Pipe type and condition will be factors in performance of anchor studs.

Anchor Stud Coupling

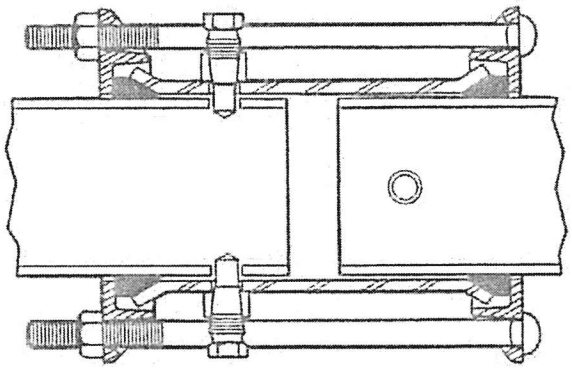

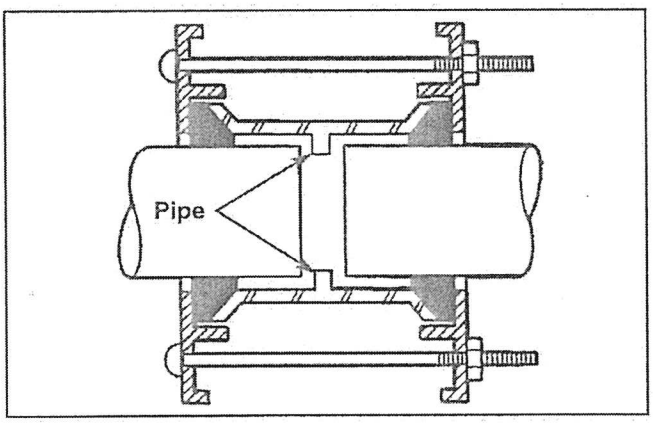

Pipe stops consists of a restriction in the center of the coupling sleeve to prevent the pipe from passing through the sleeve, and are available in most couplings upon request.

Pipe stops serve to keep the coupling centered over the pipe ends under service conditions that could possibly cause the coupling to move, such as extreme vibration or shock. They also facilitate installation of long runs of new pipeline in some circumstances.

Pipe stops limit the versatility of couplings. The inability to slide the coupling sleeve completely onto one pipe makes it necessary to cut pipe to open the pipeline for future modifications or repairs. They also limit the use of couplings to insert equipment, fittings or sections of pipe into existing pipelines.

Flexi-Coat Epoxy Powder Coating

Fusion Bonded Flexi-Coat® Epoxy Powder Coating furnished by Smith-Blair is applied by an electrostatic process. This process is a positive method of obtaining a uniform coating of controlled mil thickness with minimum field touch-up required. It is FDA approved and certified to NSF®/ANSI 61-G. for use on potable water systems, and it meets application methods AWWA C550, C213 and C219.

Note: From a technical standpoint, it is not considered good practice to apply wet type finish coatings prior to installation of pipe couplings. The handling of these fittings, prior to and during installation, is likely to damage the coating beyond repair.

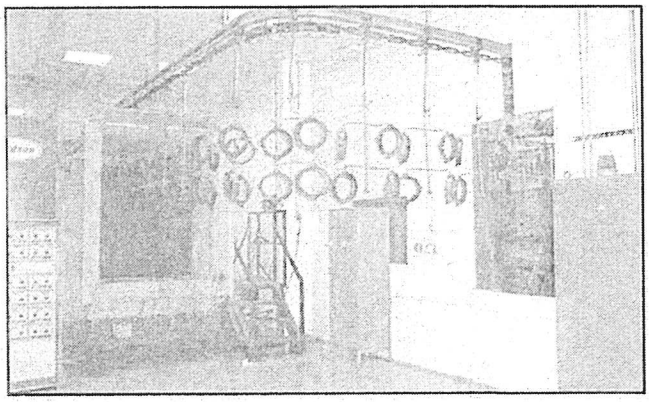

411 Steel Couplings

Standard Length Sleeves 1/2" thru 12" Steel Pipe Sizes

Nom. Pipe Size In.	Pipe O.D. Inches	Catalog No. Buna-N Gasket	Sleeve Thk. X Lgth. In.		Flange O.D. Inches (D)	Bolts			Approx. Ship Wt. Lbs.
			(A)	(B)		No.	Dia. In.	Lgth. In. (L)	
1/2	.084	411-00008401-003	.120	4 1/2	3 5/8	2	1/2	7	2 1/4
3/4	1.05	411-00010501-003	.120	4 1/2	3 7/8	2	1/2	7	2 1/2
1	1.32	411-00013201-003	.120	5	4 1/4	2	1/2	7	3 1/4
1 1/4	1.66	411-00016601-003	.120	5	4 9/16	2	1/2	7	4
1 1/2	1.90	411-00019001-003	.120	5	4 13/16	2	1/2	7	4 1/4
2	2.00	411-00020001-003	.120	5	4 13/16	2	1/2	7	4 1/4
2	2.38	411-00023801-003	.120	5	5 5/16	2	1/2	7	4 3/4
		411-00023851-003	.120	5	5 11/16	2	5/8	8	5 1/2
		411-00023861-003	.120	5	5 11/16	3	5/8	8	6 1/2
		411-00023802-003	.120	7	5 11/196	3	5/8	10 1/2	9 1/2
2 1/2	2.88	411-00028801-003	.203	5	6 1/2	3	5/8	8	12 3/4
3	3.00	411-00030001-003	.203	5	6 9/16	3	5/8	8	12 3/4
+3	3.50	411-90035001-003	.180	5	8.03	3	5/8	6	11 1/2
3		411-00035051-003	.180	5	7.09	4	5/8	8	12 1/4
+3		411-90035002-003	.180	7	8.03	3	5/8	10 1/2	14 1/2
3 1/2-4	4.00	411-00040001-003	.188	5	7 9/16	4	5/8	8 1/2	17 1/2
+4	4.50	411-90045001-003	.188	5	9.05	4	5/8	6	13
		411-90045002-003	.188	7	9.05	4	5/8	8	15 1/2
4 1/2-5	5.00	411-00050001-003	.250	5	8 5/8	4	5/8	8	20 1/2
5	5.56	411-00055601-003	.250	5	9 3/16	4	5/8	8	20 1/2
		411-00055602-003	.250	7	9 3/16	4	5/8	10 1/2	23 1/2
		411-00055603-003	.250	10	9 3/16	4	5/8	13 1/2	31 1/2
+6	6.63	411-90066301-003	.250	5	11 1/2	6	5/8	6	22 3/4
		411-90066302-003	.250	7	11 1/2	6	5/8	8	26
		411-90066303-003	.250	10	11 1/2	6	5/8	10 1/2	34 1/4
+8	8.63	411-90086301-003	.250	5	13 1/2	6	5/8	6	28
		411-90086302-003	.250	7	13 1/2	6	5/8	8	32
		411-90086303-003	.250	10	13 1/2	6	5/8	10 1/2	42
10	10.00	411-00100001-003	.250	5	14 5/16	8	5/8	8	33
		411-00100002-003	.250	7	14 5/16	8	5/8	10 1/2	38
		411-00100003-003	.250	10	14 5/16	8	5/8	13 1/2	50
+10	10.75	411-90107501-003	.250	5	15.61	8	5/8	6	34
		411-90107502-003	.250	7	15.61	8	5/8	8	40
		411-90107507-003	.375	7	15.61	8	5/8	8	49
		411-90107503-003	.250	10	15.61	8	5/8	10 1/2	52
12	12.00	411-00120001-003	.250	5	16 5/16	8	5/8	8	37
		411-00120002-003	.250	7	16 5/16	8	5/8	10 1/2	44
		411-00120003-003	.250	10	16 5/16	8	5/8	13 1/2	56
+12	12.75	411-90127501-003	.250	5	17.61	8	5/8	6	39
		411-90127502-003	.250	7	17.61	8	5/8	8	46
		411-90127507-003	.375	7	17.61	8	5/8	8	56
		411-90127503-003	.250	10	17.61	8	5/8	10 1/2	59

+ Indicates couplings furnished with steel "Z" section, High Strength Follower Flanges.

The basic design of bolted compression couplings does not provide for anchoring the pipes against pull-out. Suitable anchorage must be provided when excessive pipe movement could cause the pipe to move out of the coupling.

NOTE: Couplings working pressures depend on many variables such as pipe type, pipe diameter, sleeve thickness, sleeve material, gasket cross section, follower type and number of bolts. Consult Smith-Blair® regarding your specific coupling pressure requirements.

Standard Length Sleeves 14" thru 24" Steel Pipe Sizes

Nom. Pipe Size In.	Pipe O.D. Inches	Catalog No. Buna-N Gasket	Sleeve Thk. X Lgth. In.		Flange O.D. Inches (D)	Bolts			Approx. Ship Wt. Lbs.
			(A)	(B)		No.	Dia. In.	Lgth. In. (L)	
14	14.00	411-00140001-003	1/4	5	18 5/16	6	5/8	8	41
		411-00140002-003	1/4	7	18 5/16	6	5/8	10 1/2	48
		411-00140007-003	3/8	7	18 7/16	6	5/8	10 1/2	75
		411-00140008-003	3/8	10	18 7/16	6	5/8	13 1/2	94
16	16.00	411-00160002-003	1/4	7	20 5/16	8	5/8	10 1/2	56
		411-00160007-003	3/8	7	20 7/16	8	5/8	10 1/2	87
		411-00160003-003	1/4	10	20 5/16	8	5/8	10 1/2	72
		411-00160008-003	3/8	10	20 7/16	8	5/8	10 1/2	108
18	18.00	411-00180002-003	1/4	7	22 7/16	8	5/8	10 1/2	81
		411-00180007-003	3/8	7	22 7/16	8	5/8	10 1/2	96
		411-00180003-003	1/4	10	22 7/16	8	5/8	13 1/2	109
		411-00180008-003	3/8	10	22 7/16	8	5/8	13 1/2	119
20	20.00	411-00200002-003	1/4	7	24 7/16	10	5/8	10 1/2	91
		411-00200007-003	3/8	7	24 7/16	10	5/8	10 1/2	107
		411-00200003-003	1/4	10	24 7/16	10	5/8	13 1/2	122
		411-00200008-003	3/8	10	24 7/16	10	5/8	13 1/2	134
22	22.00	411-00220002-003	1/4	7	26 7/16	10	5/8	10 1/2	98
		411-00220007-003	3/8	7	26 7/16	10	5/8	10 1/2	116
		411-00220003-003	1/4	10	26 7/16	10	5/8	13 1/2	132
		411-00220008-003	3/8	10	26 7/16	10	5/8	13 1/2	145
24	24.00	411-00240002-003	1/4	7	28 7/16	10	5/8	10 1/2	106
		411-00240007-003	3/8	7	28 7/16	10	5/8	10 1/2	125
		411-00240003-003	1/4	10	28 7/16	10	5/8	13 1/2	142
		411-00240008-003	3/8	10	28 7/16	10	5/8	13 1/2	156

The basic design of bolted compression couplings does not provide for anchoring the pipes against pull-out. Suitable anchorage must be provided when excessive pipe movement could cause the pipe to move out of the coupling.

NOTE: Couplings working pressures depend on many variables such as pipe type, pipe diameter, sleeve thickness, sleeve material, gasket cross section, follower type and number of bolts. Consult Smith-Blair® regarding your specific coupling pressure requirements.

411 Steel Couplings (Standard)
for Cast and Ductile Iron Pipe Sizes

Smith-Blair's 411 Steel Coupling for cast iron, asbestos cement and steel pipe provides a means for connecting cast iron, steel, asbestos cement, plastic or other type of pipe with a coupling having a steel sleeve. The sleeve has a fusion bonded epoxy coating that provides protection from corrosive environments or line contents.

Dimensions

A: Sleeve wall thickness

B: Sleeve length

D: Overall coupling diameter

L: Overall coupling length

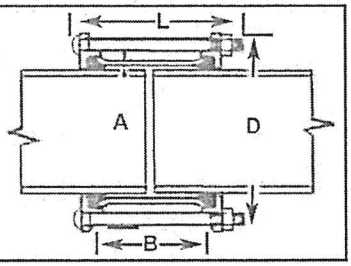

Material Specifications

SLEEVE: ASTM A-53, ASTM A512 or carbon steel having a minimum yield of 30,000 psi. Fusion bonded epoxy provides an average 12 mil protective coating and is FDA approved for potable water systems.

FOLLOWERS: Ductile iron ASTM A-536 or steel AISI C1020. Designed for high strength/weight ratio. Follower thickness determined by coupling size.

BOLTS & NUTS: High-strength, low-alloy steel with heavy semi-finished hexagon nuts.

GASKETS: Nitrile (Buna N) NSF® 61 compounded to produce superior storage and performance characteristics while resisting water, acids, alkalies, most (aliphatic) hydrocarbons and many other chemicals.
Temperatures range: -20°F. to 180°F (consult manufacturer for specific applications or other service temperatures).

FINISH: Fusion bonded Flexi-Coat® Epoxy per AWWA C213.

Material Specifications are subject to change.

Standard Length Sleeves 2" thru 14" pipe sizes.

Nom. Pipe Size In.	Pipe O.D. Inches	Catalog No.	Sleeve Thk. X Lgth. In. (A)	Sleeve Thk. X Lgth. In. (B)	Overall Dia. (D)	Bolts No.	Bolts Dia. In.	Bolts Lgth. In. (L)	Approx. Ship Wt. Lbs.
2	2.34-2.56	411-00025002-003	.216	7	6.3/16	2	5/8	10 1/2	13.5
		411-00025003-003	.216	10	6.3/16	2	5/8	13 1/2	16.3
2 1/2	2.75-2.88	411-00027502-003	.203	7	6.3/16	3	5/8	11	14.8
		411-00027503-003	.203	10	6.3/16	3	5/8	14	17.8
3	3.75-3.86	411-00038002-003	.237	7	7 13/16	3	5/8	10 1/2	20.3
		411-00038003-003	.237	10	7 13/16	3	5/8	13 1/2	24.6
3-4	3.87-4.04	411-00039602-003	.188	7	7 11/32	4	5/8	11	21.4
		411-00039603-003	.188	10	7 11/32	4	5/8	14	25.7
4	4.07-4.19	411-00041302-003	.188	7	8 3/32	4	5/8	11	22.3
		411-00041303-003	.188	10	8 3/32	4	5/8	14	26.8
4	4.74-5.06	411-00050002-003	.250	7	8 19/32	4	5/8	11	27
		411-00050003-003	.250	10	8 19/32	4	5/8	14	32.5
4-5	5.00-5.16	411-00051002-003	.250	7	9 5/32	4	5/8	11	27.5
		411-00051003-003	.250	10	9 5/32	4	5/8	14	33.1
6	6.84-6.96	411-00069002-003	.250	7	10 9/16	5	5/8	11	37.2
		411-00069003-003	.250	10	10 9/16	5	5/8	14	44.8
6	7.04-7.16	411-00071002-003	.250	7	10 9/16	5	5/8	11	38.3
		411-00071003-003	.250	10	10 9/16	5	5/8	14	46.1
6	7.14-7.26	411-00072002-003	.250	7	11 5/16	5	5/8	11	38.8
		411-00072003-003	.250	10	11 5/16	5	5/8	14	46.8
8	8.91-9.30	411-00090502-003	.250	7	12 13/16	6	5/8	11	48.8
		411-00090503-003	.250	10	12 13/16	6	5/8	14	58.8
8	9.30-9.50	411-00094202-003	.250	7	13 23/32	6	5/8	11	50.8
		411-00094203-003	.250	10	13 23/32	6	5/8	14	61.2
10	11.04-11.16	411-00111002-003	.250	7	15 1/8	7	5/8	11	59.9
		411-00111003-003	.250	10	15 1/8	7	5/8	14	72.1
10	11.34-11.46	411-00114002-003	.250	7	15 1/8	7	5/8	11	61.5
		411-00114003-003	.250	10	15 1/8	7	5/8	14	74.1
10	11.84-12.00	411-00119502-003	.250	7	16	8	5/8	11	64.5
		411-00119503-003	.250	10	16	8	5/8	14	77.7
12	13.14-13.26	411-00132007-003	.375	7	17 5/8	8	5/8	11	71.3
		411-00132008-003	.375	10	17 5/8	8	5/8	14	85.8
12	13.44-13.56	411-00135007-003	.375	7	17 7/8	8	5/8	11	72.9
		411-00135008-003	.375	10	17 7/8	8	5/8	14	87.8
12-14	13.88-14.06	411-00139207-003	.375	7	18 15/16	6	5/8	11	75.2
		411-00139208-003	.375	10	18 15/16	6	5/8	14	90.5

RRSPL-WT-5100

662 - Carbon Flange Tapping Sleeve
663 - Stainless Steel Flange Tapping Sleeve
Stainless Steel Body and Neck

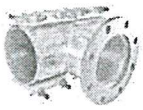

ANSI/NSF®61 Listed

662-663 Tapping Sleeve Specifications

Outlet Size	Nominal Body Size	A (in.)	B (in.)	C (in.)	D (in.)	E	F (in.)
4	4	15	5	5 1/16	4 3/16	8	5/8
	6-18	15	5	5 1/16	4 3/4	8	5/8
	20-24	20	5	5 1/16	4 3/4	15	5/8
6	6	15	5	7 1/16	6 5/16	8	5/8
	8-18	15	5	7 1/16	6 3/4	8	5/8
	20-24	20	5	7 1/16	6 3/4	15	5/8
8	8	20	5	9 1/16	8 3/8	10	5/8
	10-18	20	5	9 1/16	8 3/4	10	5/8
	20-24	25	5	9 1/16	8 3/4	24	5/8
10	10	25	5	11 3/32	10 1/4	16	5/8
	12-18	25	5	11 3/32	10 3/4	16	5/8
	20-24	25	5	11 3/32	10 3/4	24	5/8
12	12	25	5	13 3/32	12 1/4	16	5/8
	14-18	25	5	13 3/32	12 3/4	16	5/8
	20-24	25	5	13 3/32	12 3/4	24	5/8

Optional 316 Stainless Steel.

Material Specifications

Body: Full circumference band.
18-8 type 304 Stainless Steel.

Flanges: AWWA C207 Class D, ANSI 150# drilling.
Recessed for Tapping Valve Per MSS-SP 60.
Fusion bonded, Flexi-Coat® epoxy coated carbon steel on 662.
18-8 type 304 stainless steel flange on 663.
Optional: Other types of Flanges, threaded outlets, MJ Outlets.

Gasket: Nitrile (Buna-N) NSF® 61 compounded to resist water, oil, acids, alkalies, most (aliphatic) hydrocarbon fluids and many chemicals. Temperatures up to 180°F.

Bolts, Nuts & Washers: 18-8 type 304 stainless steel heavy hex nuts, stud bolts & washers. Nuts and studs are coated to prevent galling.

Material specifications are subject to change.

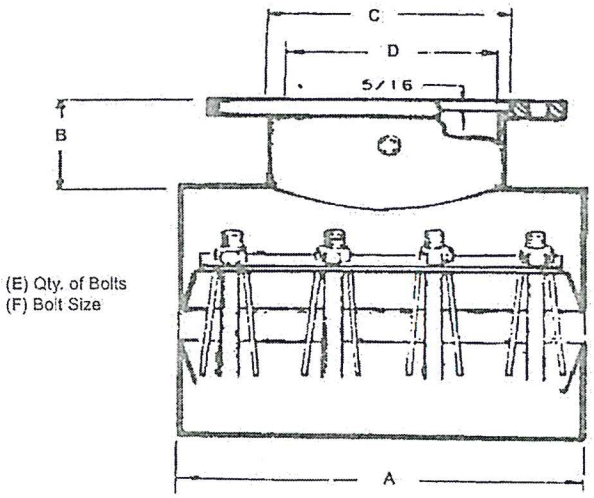

662 - Carbon Flange Tapping Sleeve
663 - Stainless Steel Flange Tapping Sleeve
Stainless Steel Body and Neck

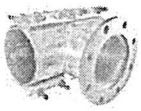

ANSI/NSF®61 Listed

Nominal Size of Pipe x Flanged Outlet	O. D. Range (Inches)	662 Flexi-Coat® Epoxy Coated Carbon Steel Flange	663 Stainless Steel Flange	Approx. Weight Each Pounds
		Catalog Number	Catalog Number	
12 x 4	12.50-12.90	662-12750400-000	663-12750400-000	51
12 x 6		662-12750600-000	663-12750600-000	55
12 x 8		662-12750800-000	663-12750800-000	75
12 x 10		662-12751000-000	663-12751000-000	80
12 x 12		662-12751200-200	663-12751200-200	110
12 x 4	13.16-13.56	662-13200400-000	663-13200400-000	51
12 x 6		662-13200600-000	663-13200600-000	55
12 x 8		662-13200800-000	663-13200800-000	75
12 x 10		662-13201000-000	663-13201000-000	80
12 x 12		662-13201200-200	663-13201200-200	110
12 x 4	13.60-14.09	662-13820400-000	663-13820400-000	51
12 x 6		662-13820600-000	663-13820600-000	55
12 x 8		662-13820800-000	663-13820800-000	75
12 x 10		662-13821000-000	663-13821000-000	80
12 x 12		662-13821200-200	663-13821200-200	110
12 x 4	14.10-14.58	662-14250400-000	663-14250400-000	51
12 x 6		662-14250600-000	663-14250600-000	55
12 x 8		662-14250800-000	663-14250800-000	75
12 x 10		662-14251000-000	663-14251000-000	80
12 x 12		662-14251200-200	663-14251200-200	110
14 x 4	15.30-15.80	662-15300400-000	663-15300400-000	72
14 x 6		662-15300600-000	663-15300600-000	76
14 x 8		662-15300800-000	663-15300800-000	95
14 x 10		662-15301000-000	663-15301000-000	102
14 x 12		662-15301200-000	663-15301200-000	135
14 x 4	15.80-16.30	662-16000400-000	663-16000400-000	72
14 x 6		662-16000600-000	663-16000600-000	76
14 x 8		662-16000800-000	663-16000800-000	95
14 x 10		662-16001000-000	663-16001000-000	102
14 x 12		662-16001200-000	663-16001200-000	135
14 x 4	16.40-16.80	662-16400400-000	663-16400400-000	72
14 x 6		662-16400600-000	663-16400600-000	76
14 x 8		662-16400800-000	663-16400800-000	95
14 x 10		662-16401000-000	663-16401000-000	102
14 x 12		662-16401200-000	663-16401200-000	135
16 x 4	17.40-17.80	662-17400400-000	663-17400400-000	77
16 x 6		662-17400600-000	663-17400600-000	82
16 x 8		662-17400800-000	663-17400800-000	103
16 x 10		662-17401000-000	663-17401000-000	108
16 x 12		662-17401200-000	663-17401200-000	145
16-18 x 4	18.60-19.20	662-18700400-000	663-18700400-000	77
16-18 x 6		662-18700600-000	663-18700600-000	82
16-18 x 8		662-18700800-000	663-18700800-000	103
16-18 x 10		662-18701000-000	663-18701000-000	108
16-18 x 12		662-18701200-000	663-18701200-000	145
18-20 x 4	19.50-20.10	662-19500400-000	663-19500400-000	78
18-20 x 6		662-19500600-000	663-19500600-000	82
18-20 x 8		662-19500800-000	663-19500800-000	105
18-20 x 10		662-19501000-000	663-19501000-000	111
18-20 x 12		662-19501200-000	663-19501200-000	147
18-20 x 4	20.90-21.59	662-20900400-000	663-20900400-000	78
18-20 x 6		662-20900600-000	663-20900600-000	82
18-20 x 8		662-20900800-000	663-20900800-000	105
18-20 x 10		662-20901000-000	663-20901000-000	111
18-20 x 12		662-20901200-000	663-20901200-000	147