RRSPL-WT-7000

SIGMA

Valve Boxes

Municipal

CASTINGS

VB126W

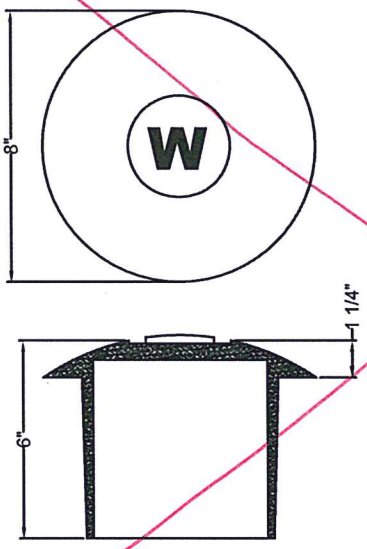

Weight: 13 lbs.

VB126S

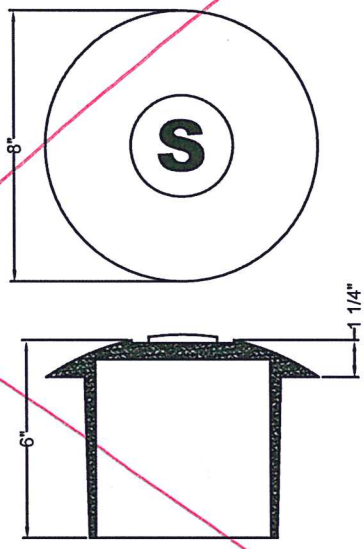

Weight: 13 lbs.

VB149 (Austin, TX)

VB1490 - Lid Only
Weight: 14 lbs.

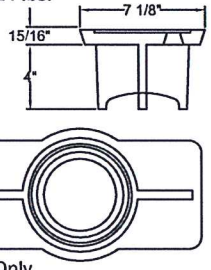

VB1491 - Bottom Only
Weight: 64 lbs.

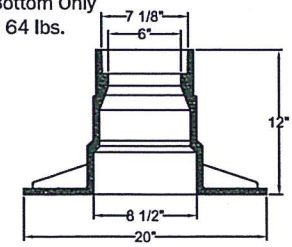

VB149 Weight: 78 lbs. (set)

Related Items

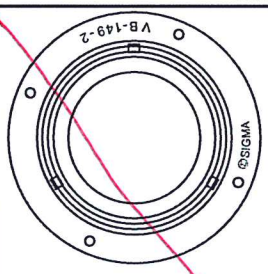

VB1492 - Paving Ring
Weight: 23 lbs.

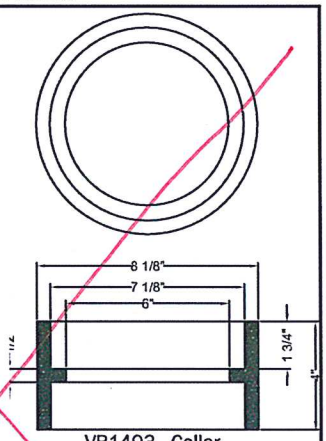

VB1493 - Collar
Weight: 15 lbs.

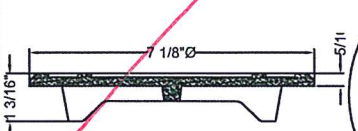

VB1495 - Property Owner's Cutoff
Weight: 15 lbs.

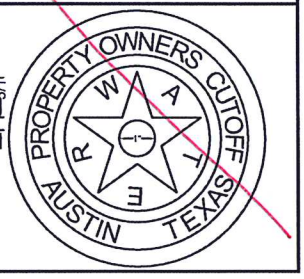

©2007 Sigma Corporation, All Rights Reserved