RRSPL - WW - 7000

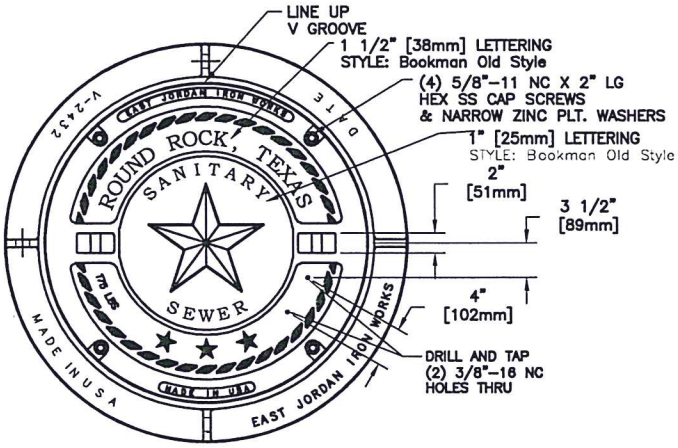

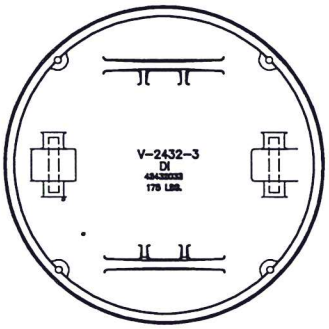

BOTTOM VIEW

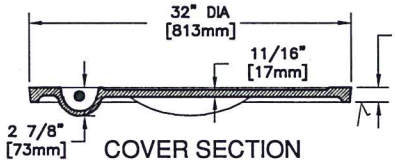

COVER SECTION

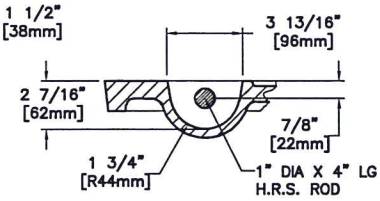

PICKBAR DETAIL

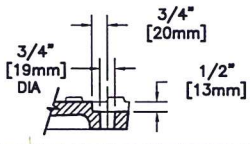

BOLT HOLE SECTION

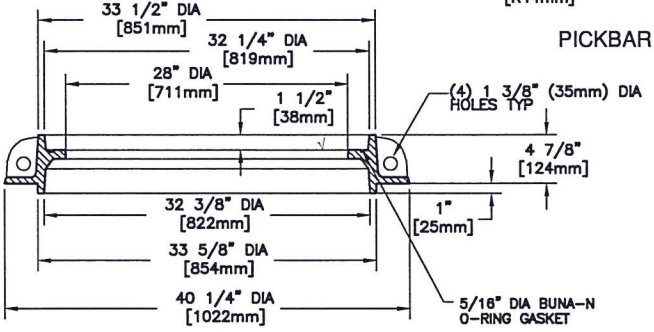

SECTION

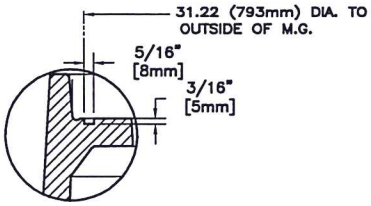

MACHINE GROOVE DETAIL

CONFIDENTIAL: This drawing is the property of East Jordan Iron Works, Inc. and embodies confidential information, trade secret information, and/or know how that is the property of East Jordan Iron Works, Inc. © Copyright 2007 East Jordan Iron Works, Inc.

EJIW EAST JORDAN IRON WORKS EST.1883
800-626-4653
www.ejiw.com
MADE IN USA

PRODUCT NUMBER
42432073

CATALOG NUMBER
V-2432 FR
V2432-3 CV

MANHOLE ASSEMBLY

LOAD RATING
HEAVY DUTY

COATING
UNDIPPED

ESTIMATED WEIGHT
COVER: 175 LBS 80kg
FRAME: 225 LBS 102kg
ASSY : 400 LBS 182kg

MATERIAL SPECIFICATION
COVER – DUCTILE IRON ASTM A536
FRAME – GRAY IRON ASTM A48 CL35B

OPEN AREA
N/A

√ DESIGNATES MACHINED SURFACE

DRAWN	DATE
DEW	11/10/05
LAST REVISED	DATE
GAD	07/06/07

REFERENCE INFORMATION
42432011
42432033