RRSPL-WW-4010

PLASTIC TRENDS
Quality Fittings By Design

Series H

Call today to **experience** the **benefits** and **value** of PVC **Heavy Wall** Gasketed Sewer Fittings

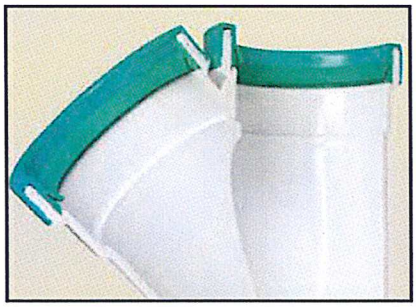

New ring design adds to the many benefits already found in Plastic Trends SDR 26 Gasketed Sewer Fittings.

SDR 26 PVC Heavy Wall Gasketed Sewer Fittings

Injection Molded in Sizes 4" – 8"

Fabricated in sizes 10" – 18"

Injection Molded Features

- New square design of the ring - permanently locks the ring onto the fitting.
- Distinctive green rings and gaskets - for easy identification without having to go down into the trench.
- Deep lead into the gasket - enhances assembly and reduces the possibility of gasket damage.
- Shock absorbing ring - reduces effect of excessive impact.
- Extra heavy wall thickness behind the gasket race - absorbs angular deflection.
- NSF Listed - Meets or exceeds ASTM D 3034 SDR 26 standard specs.
- Minimum SDR 18 wall thickness - for 4" and 6" branches on our 8", 10" and 12" tees, wyes, and sanitary tees (T-Y's).

Applications

Heavy Wall Gasketed Sewer fittings can be used where extra heavy (SDR 26) is specified by your local jurisdiction. SDR 26 fittings are intended for non-pressure drainage of sewage and surface water.

Certifications

Heavy Wall Gasketed Sewer fittings are third party tested and listed by NSF to meet specifications defined in ASTM D 3034.

See available configurations on the opposite side of this sheet.

Series **H**

SDR 26
PVC Heavy Wall Gasketed Sewer Fittings

Injection Molded in Sizes 4" – 8"
Fabricated in Sizes 10" – 18"

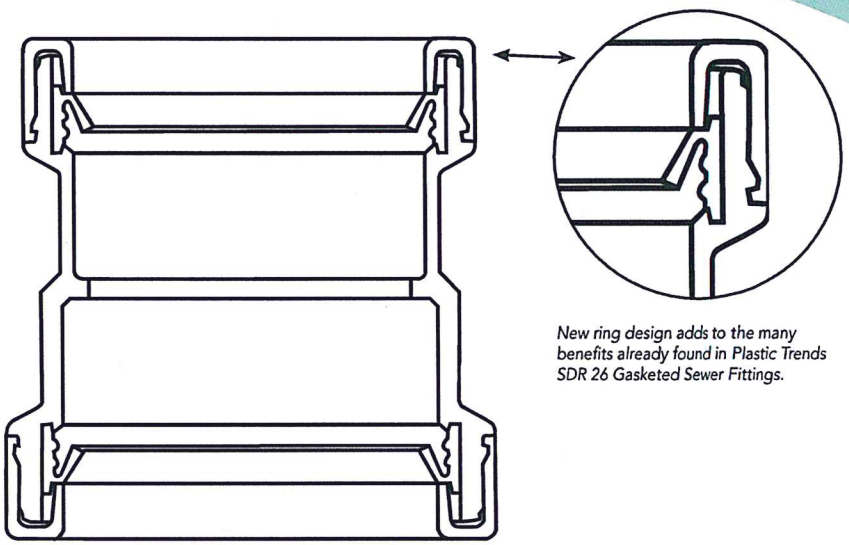

New ring design adds to the many benefits already found in Plastic Trends SDR 26 Gasketed Sewer Fittings.

Short Form Specifications

4" through 18" gasketed SDR 26 sewer fittings shall be manufactured in accordance with ASTM D 3034 and F 1336. Fitting gaskets shall comply with ASTM F 477 or ASTM F 913. Fitting gaskets shall be locked firmly in position to prevent displacement. 4" through 8" SDR 26 fittings shall have green color coded gasket retaining rings for easy identification. 4" through 8" fittings shall be injection molded from virgin PVC compound having a minimum cell classification of 12454 or 13343 in accordance with, and certified by the National Sanitation Foundation (NSF), to meet ASTM D 1784. 10" through 15" gasketed SDR 26 sewer fittings may be injection molded or fabricated from pipe meeting the requirements of ASTM D 3034. Gasket joints of all fitting sizes must comply with ASTM D 3212 Internal Pressure Test (exfiltration) and Vacuum Test (infiltration) at 5 degrees of gasket joint deflection. Gasketed SDR 26 sewer fittings shall be certified by the National Sanitation Foundation (NSF) to meet ASTM D 3034.

Examples of Configurations Available

Branches | Bends | Adapters and Closures

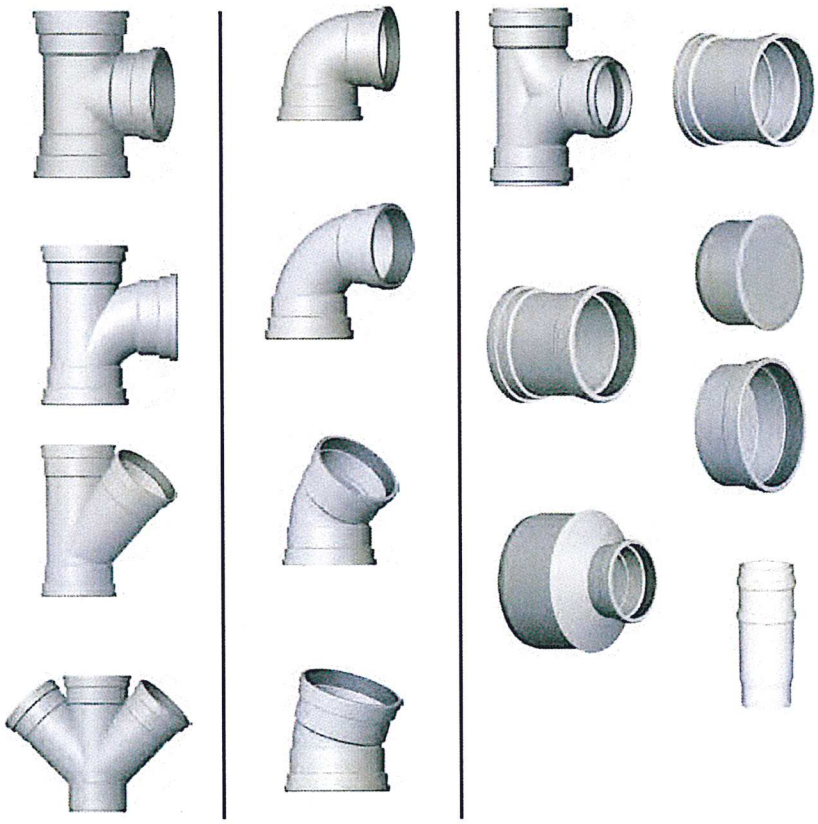

PLASTIC TRENDS

Plastic Trends, Inc.
56400 Mound Road
Shelby Twp., MI 48316
586.781.2700 • 800.232.5690
Fax: 586.781.0888
www.plastictrends.com

Royal Pipe Systems
Great Ideas Taking Shape

For additional configurations, list prices and dimensional drawings visit www.plastictrends.com